INNOVATIVE ORBITAL SOLUTIONS

AXXAIR

AN SFE GROUP BRAND

BROCHURE

www.AXXAIR.com

INTRODUCING THE S.F.E. GROUP

*The **Specialized Fabrication Equipment Group** (in short: **S.F.E. Group**) was founded in 2019 after the merger of three world leading OEM's in the field of pipe fabrication tooling and machinery: B&B Pipe and Industrial Tools LLC (USA), Mathey Dearman Inc. (USA) and TAG Pipe Equipment Specialists (UK). In a time span of 5 years, another 4 renowned and market leading companies were acquired and added to the **S.F.E. Group** portfolio: Axxair (France, 2022), Magnatech (USA, 2023), Climax (USA, 2023) and Sumner (USA, 2025).*

*The vision and philosophy of the **S.F.E. Group** is to offer globally a comprehensive innovative and cost-effective range of specialized fabrication, welding and machining equipment and derived rental solutions, for a wide range of applications within all critical industries, while optimizing performance, efficiency and safety.*

*Leveraging over 200 years of combined experience in engineering, manufacturing, and field applications, the **S.F.E. Group** is committed to driving innovation. Through continuous product development and strategic acquisitions, the **S.F.E. Group** is actively growing its portfolio and expanding its global presence to meet the demands of industries around the world. Currently, the **S.F.E. Group** consists of 12 complimentary brands, each supporting the others in delivering cutting-edge solutions.*

*With offices and warehousing on 5 continents, 400+ employees and more than 500 partnerships and distributors worldwide, **S.F.E. Group** prides itself on consistently offering the highest standards of both product quality and service locally to all its customers.*

S.F.E. Group looks forward to welcoming you into its global network as a partner, distributor or end user customer and remains at your disposal at any time.

Contact Americas: sales@sfe-brands.com
Contact International: sales-int@sfe-brands.com

S.F.E. GROUP GLOBAL PRESENCE

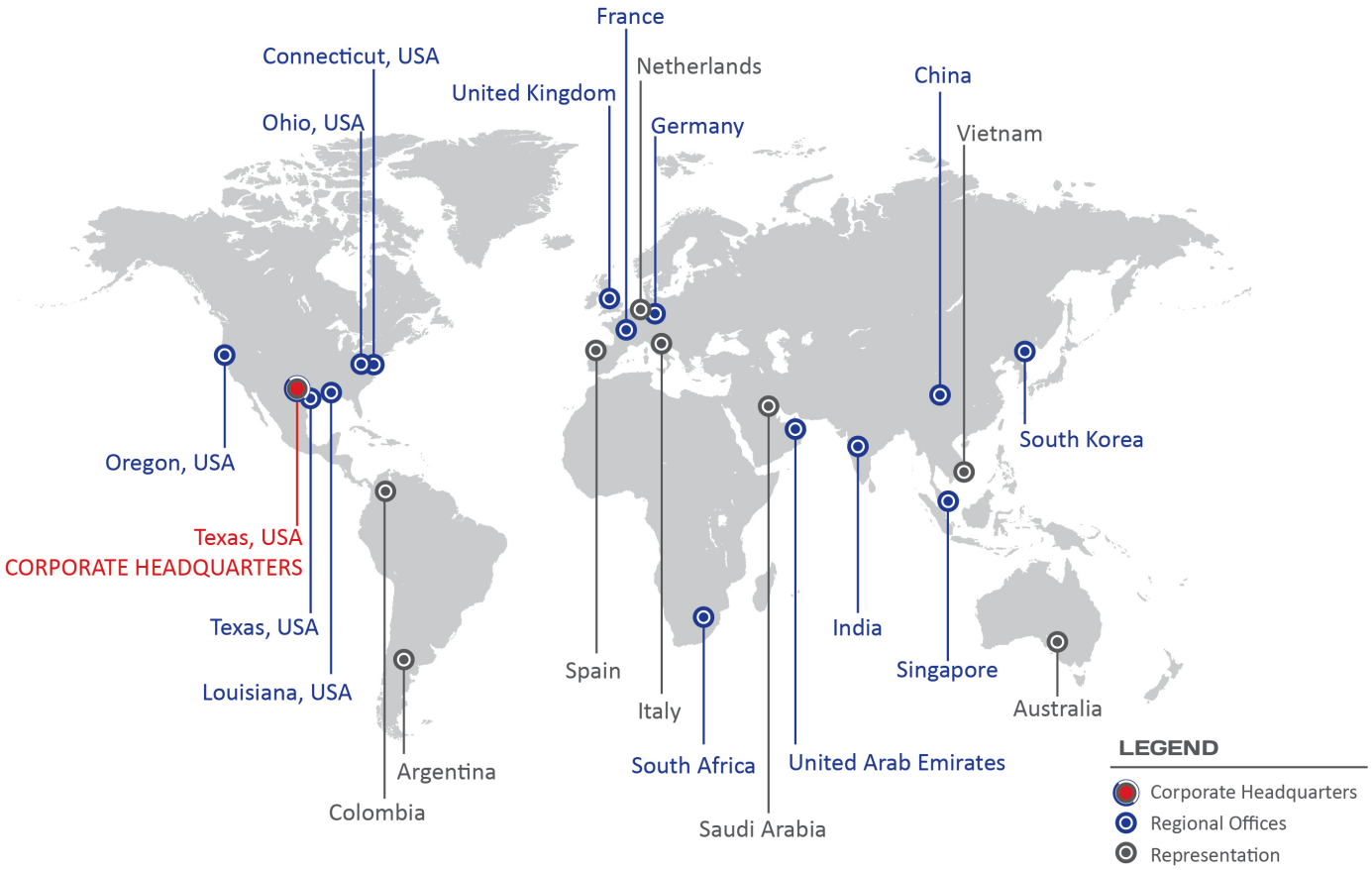

INTRODUCING AXXAIR

*Originally founded in 1997, the brand **AXXAIR** encompasses within S.F.E. Group the overall tube working processes: orbital cutting, tube bevelling, squaring and orbital GTAW welding.*

*The **AXXAIR** brand has been in the global market for nearly 30 years and has established itself as a leading and international reference on the field of tube processing applications. **AXXAIR** offers innovative solutions to improve processes, productivity, efficiency and quality in the field of orbital cutting, bevelling and welding on a wide variety of different materials such as stainless steel, titanium, carbon steel, duplex and super duplex stainless steel, nickel alloys and even plastic.*

*Within the **AXXAIR** range S.F.E. Group not only offers a standard range of products, but also customized solutions for specific target markets: the food and beverage industry, aerospace, pharmaceuticals, the manufacturing of semi-conductors, aeronautics, chemical and petrochemical industry as well as the nuclear industry and many other possible areas of application.*

*The S.F.E. Group **AXXAIR** brand portfolio consists of a **complete range of orbital cutting machines** (0.25 - 40" / 5 - 1,016 mm), **orbital bevelling machines** (0.6 - 12.75" / 15 - 328 mm o/d), **squaring machines** (0.1 - 8.5" / 3 - 220 mm o/d), as well as **welding machines**: **prefabrication welding solutions** (0.5 - 12.75" / 12 - 328 mm o/d), **SATO and OX open heads** (0.4 - 8.265" / 10 – 220 mm o/d), **SATFX closed heads** (0.25 - 6.625" / 38 - 170 mm o/d), the **Microfit welding X- and SAMX-ranges** (0.118 - 1" / 3 - 25.4 mm o/d), and finally the **SATP tube to tube sheet** (0.47 - 3.23" / 12 - 82 mm o/d) application. In addition, the portfolio includes multi-brand compatible orbital welding solutions, such as AMX closed heads and adapter kits, designed for compatibility with other major industry brands.*

*Being a patented manufacturer of orbital tube and pipe processing machines, **AXXAIR** is constantly exploring new concepts in the field of orbital tube cutting, pipe bevelling, and GTAW orbital welding.*

***AXXAIR** products are always nearby available within the S.F.E. Group global network and can be consulted on the dedicated website: **www.AXXAIR.com**.*

INDUSTRIES SERVED

AEROSPACE & AERONAUTICS

BIOTECHNOLOGY & LIFE SCIENCES

CHEMISTRY

FOOD & BEVERAGE

PHARMACEUTICAL

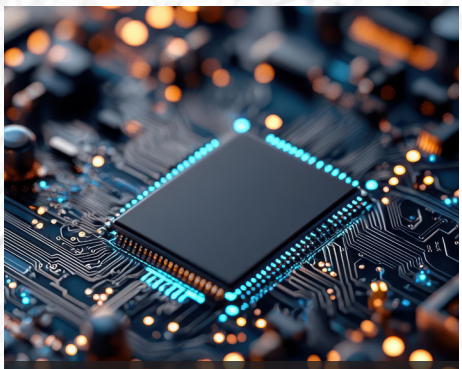
SEMICONDUCTOR

OUR BRANDS

CLIMAX · TAG PIPE EQUIPMENT SPECIALISTS · H&S TOOL · MATHEY DEARMAN · AXXAIR · MAGNATECH · B&B SUMNER · CALDER · BORTECH · PPM PIPE PURGE MASTERS · FIT-UP PRO · SUMNER MATERIAL LIFTS

Our group policy is one of continuous improvements and acquisitions. Products and data tables are subject to change and may vary from those illustrated. Copyright © 2026 Specialized Fabrication Equipment Group, All rights reserved.

2
INTRODUCTION TO S.F.E. GROUP

3
INTRODUCTION TO AXXAIR

5
ORBITAL CUTTING & BEVELLING MACHINES

7
81M / 121ECO / 171ECO
ORBITAL CUTTING MACHINES

11
CC122 / CC172 / CC222 / CC322
ORBITAL CUTTING MACHINES

15
CC421 / CC521 / CC721 / CC1100
ORBITAL CUTTING MACHINES

21
GA122 / GA172 / GA222 / GA322
ORBITAL BEVELLING MACHINES

25
ACCESSORIES & CONSUMABLES

35
TUBE FACING & SQUARING MACHINES

37
DC25 / DC65 (3-63.5 mm/0.1-2.5")

41
DC115 / DC221 (12-220 mm/0.5 - 8.5")
WITH CLAMPING JAWS

45
DC115 / DC221 (12-220 mm/0.5 - 8.5")
WITH CONCENTRIC CLAMPING

49
ACCESSORIES & CONSUMABLES

53
ORBITAL WELDING SOLUTIONS

55
PREFABRICATION
SX WITH FUSION/FUSION+WIRE

59
SX WITH AVC/OSC

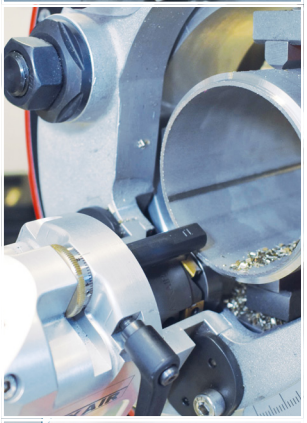

63
ACCESSORIES & CONSUMABLES

67
MICROFIT CLOSED WELD HEADS
X-500

71
X-750

77
SAMX-17

83
SAMX-25

89
CLOSED WELD HEADS
SATFX-52 / SATFX-76 / SATFX-115

93
SATFX-170

97
ACCESSORIES & CONSUMABLES

119
OPEN WELD HEADS
OX FUSION / FUSION + WIRE

129
SATO 220 FUSION / FUSION + WIRE

133
SATO WITH AVC/OSC

137
ACCESSORIES & CONSUMABLES FOR SATO

133
TUBE TO TUBESHEET
SATP

141
POWER SUPPLIES
SAXX-201

147
SAXX-200

155
SAXX-210

159
SAXX-300

163
ACCESSORIES & CONSUMABLES

169
MULTI BRAND COMPATIBLE ORBITAL WELDING SOLUTIONS

ORBITAL CUTTING & BEVELLING MACHINES

AXXAIR
AN SPG GROUP BRAND

www.AXXAIR.com

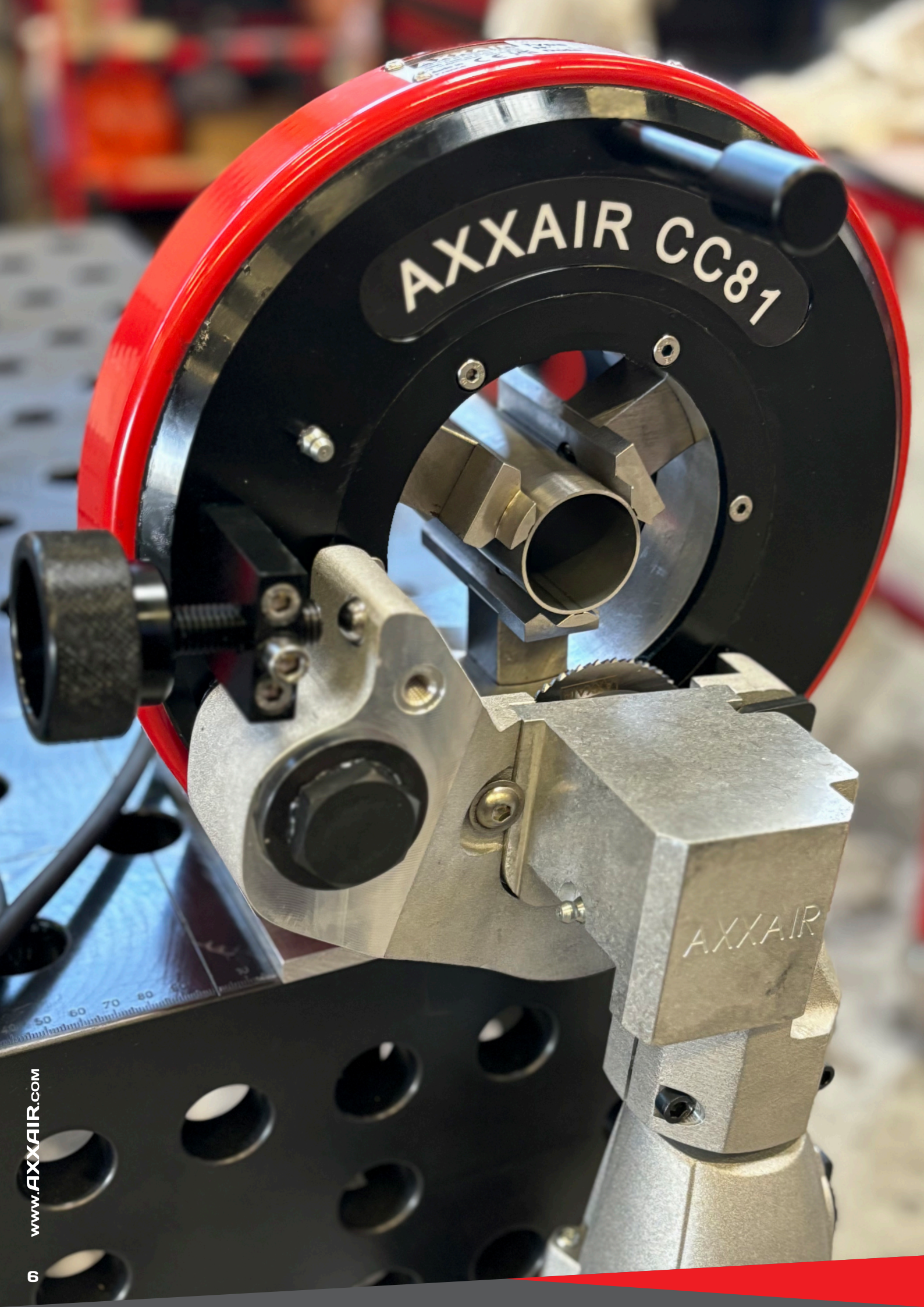
AXXAIR CC81
AXXAIR

ECO RANGE - 81M / 121ECO / 171ECO ORBITAL CUTTING MACHINES

0.25 - 6.625" o/d / 5 - 170 mm o/d

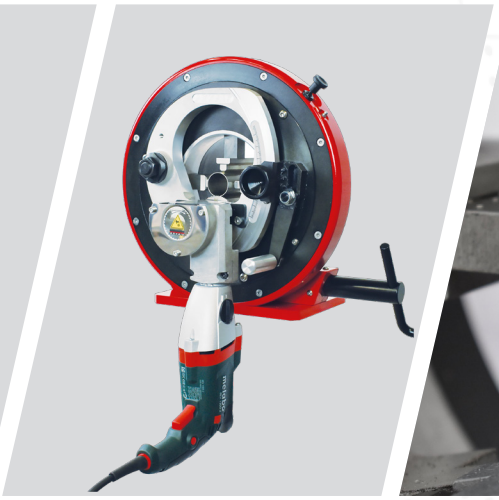

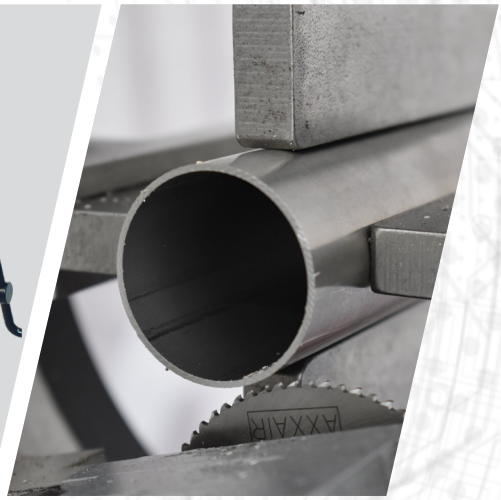

SCAN QR CODE TO WATCH VIDEO

AXXAIR
AN SPG GROUP BRAND

www.AXXAIR.com

ECO RANGE: 81M / 121ECO / 171ECO

0.25 - 6.625" o/d / 5 - 170 mm o/d

- **Functions:** Orbital tube cutting
- **Materials:** Any type of steel and exotic alloy
- **Power:** Electric 1300W 110V or 220V (Metabo motor)

During **orbital cutting** a saw blade rotates around the tube to perform the cut, delivering a square cut while maintaining the roundness of the tube. There is no distortion due to cutting forces, as the blade follows the tube section.

Designed for customers who prioritize efficiency without compromising quality, **the ECO range** ensures a superior standard of cuts (cutting capacity up to 5 mm / 0.2" wall thickness), matching the excellence of our renowned CC 122 - 322 range. What sets the ECO range apart is its commitment to affordability, while offering great orbital cutting performance for tubing and thin pipe. And for those who do not require the beveling or welding upgrades offered with the CC122 - CC322 range.

MODELS AND POWER OPTIONS

81M	121ECO	171ECO
TUBE O/D RANGE: 0.25 - 3" / 5 - 78 mm	TUBE O/D RANGE: 0.25 - 4.5" / 5 - 121 mm	TUBE O/D RANGE: 0.625 - 6.625" / 16 - 170 mm
PART NO. 81M11 (110V) PART NO. 81M21 (220V)	PART NO. 121ECO1 (110V) PART NO. 121ECO2 (220V)	PART NO. 171ECO1 (110V) PART NO. 171ECO2 (220V)

FEATURES AND ADVANTAGES

The lighter design ECO range (powered by a speed adjustable 1300W Metabo motor) consists of a stainless steel concentric clamping system with a large number of contact points, increasing the cutting range and quality and avoiding tube distortion. The stainless steel jaws guarantee protection from contamination of the tube. The penetration lever* engages the saw blade for effortless and consistent penetration and cutting of the tube, extending the blade life and improving safety and ease of operation. The short blade to jaws distance reduces vibration, extends the blade life and improves cutting quality. AXXAIR offers a wide range of high quality blades performing burr-free square cuts (< 0.25 mm / 0.01" perpendicularity precision) and lubricant oil and paste. The 121ECO and 171ECO models can be fitted with support benches for longer tubes.

*** no penetration lever on 81M11 and 81M21**

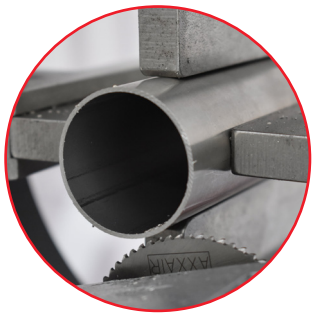

ECO RANGE TECHNICAL FEATURES

DESCRIPTION	MEASUREMENT	81M	121ECO	171ECO
Part No.	n/a	81M11 - 81M21	121ECO1 - 121ECO2	171ECO1 - 171ECO2
Diameter range	mm (o/d)	5 - 78	5 - 121	16 - 170
Diameter range	inch (o/d)	0.25 - 3	0.25 - 4.5	0.625 - 6.625
Cutting capacity	mm / inch	5 / 0.2	5 / 0.2	5 / 0.2
Blade rotational speed	rpm	24 - 144 / 68 - 413	24 - 144 / 68 - 413	24 - 144 / 68 - 413
Electric motor power	watt	1300	1300	1300
Voltage	volt	110 or 220	110 or 220	110 or 220
Frequency	Hz	50 / 60	50 / 60	50 / 60
Max acoustic radiation	dB	92	92	92
Vibration level	m/s^2	< 2.5	< 2.5	< 2.5
Unit weight	kg / lbs	15 / 33	38 / 84	44 / 97
Machine dimensions	mm	263 x 246 x 236	432 x 520 x 297	453 x 550 x 307
Machine dimensions	inch	10.35 x 13.62 x 9.29	17 x 20.47 x 11.69	17.83 x 21.65 x 10.28
Packing dimensions	mm	410 x 610 x 360	420 x 620 x 720	420 x 620 x 720
Packing dimensions	inch	16.14 x 24.02 x 14.17	16.53 x 24.41 x 28.35	16.53 x 24.41 x 28.35
Packing weight	kg / lbs	20 / 44	56 / 123.46	59 / 130
Our group policy is one of continuous improvement. Products and data tables are subject to change and may vary from those illustrated.				

121ECO
171ECO

- The 121ECO and 171ECO machines are supplied in a wooden crate.
- All motors are supplied in their own individual cases, including the necessary tools for operating the machine

81M

- 81M machine is supplied in polyethylene plastic case, including the motor and required tools

ACCESSORIES AND OPTIONS

TRIPOD STAND

121ECO / 171ECO

PART NO. CCPS21

SUPPORT BENCHES

121ECO / 171ECO

CCBSB-X1

CCBSB-X2

PART NO. CCBSB-X1
PART NO. CCBSB-X2

SUPPORT BENCHES
WITH END STOP SYSTEM

121ECO / 171ECO

PART NO. CCBSB-XX-X-XX *

*** REFER TO: ORBITAL CUTTING & BEVELLING MACHINES ACCESSORIES & CONSUMABLES**

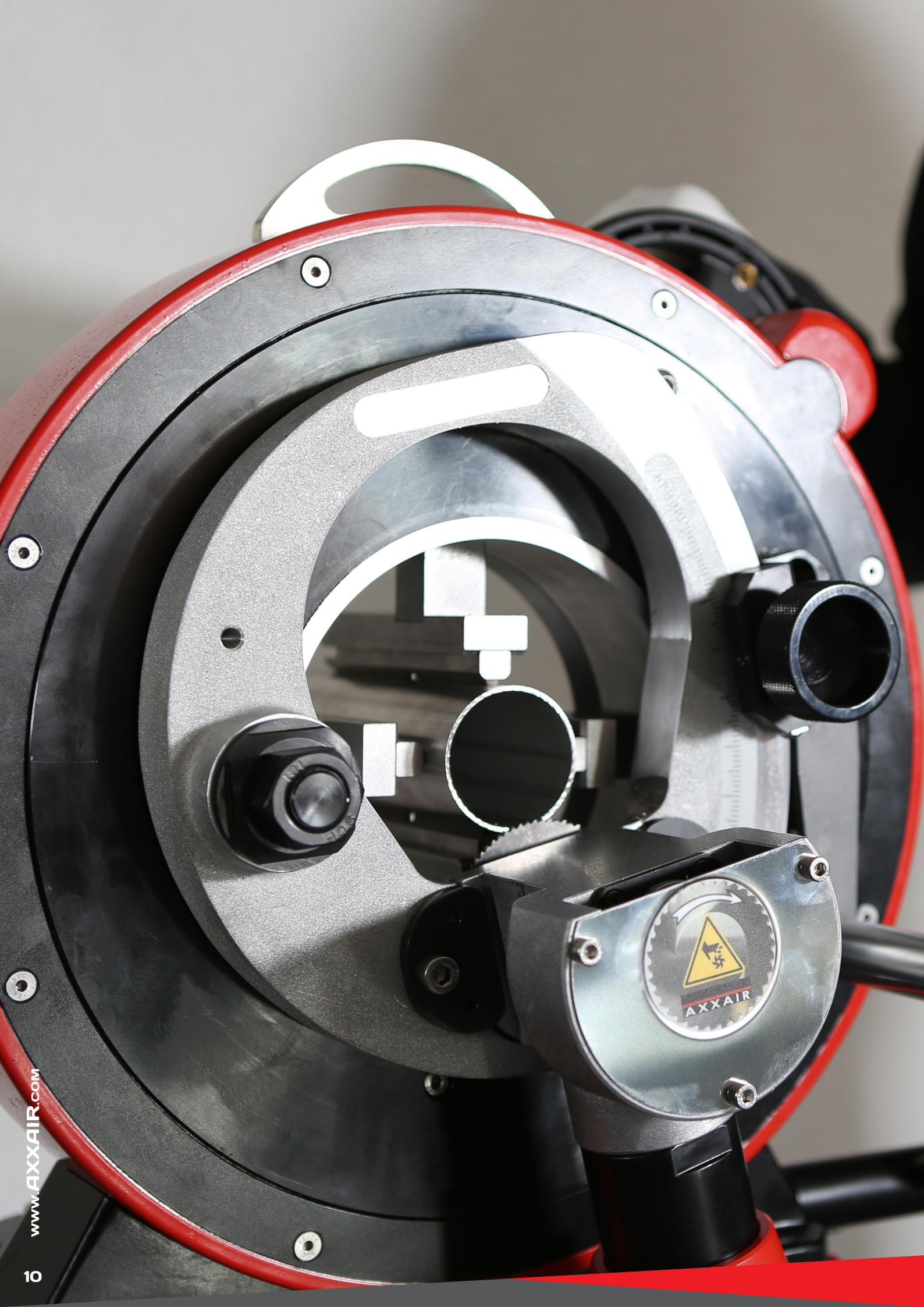
AXXAIR

CC RANGE - CC122 / CC172 / CC222 / CC322 ORBITAL CUTTING MACHINES

0.25 - 12.750" o/d / 5 - 328 mm o/d

SCAN QR CODE
TO WATCH VIDEO

AXXAIR
AN SPG GROUP BRAND

www.AXXAIR.com

CC RANGE: CC122 / CC172 / CC222 / CC322

0.25 - 12.750" o/d / 5 - 328 mm o/d

- **Functions:** Orbital tube/pipe cutting (can be transformed into a bevelling or a welding machine)
- **Materials:** Any type of steel and exotic alloy
- **Power:** Pneumatic or electric 1200 W (110V or 220V)

During **orbital cutting** a saw blade rotates around the tube to perform the cut, delivering a square cut while maintaining the roundness of the tube. There is no distortion due to cutting forces, as the blade follows the tube section.

AXXAIR's CC range of orbital cutting machines offers not only the ***largest orbital cutting range*** in the world: from 0.25" / 5 mm up to 40" / 1,016 mm, but also unrivaled versatility, flexibility, productivity and efficiency. The cutting capacity goes up to 15 mm / 0.6".

The CC range's machines' bodies offer a high level of modularity. By only setting two screws, conversion kits can be mounted onto the body, allowing the operator to use the CC range's machines for ***three applications: tube cutting, bevelling and welding***.

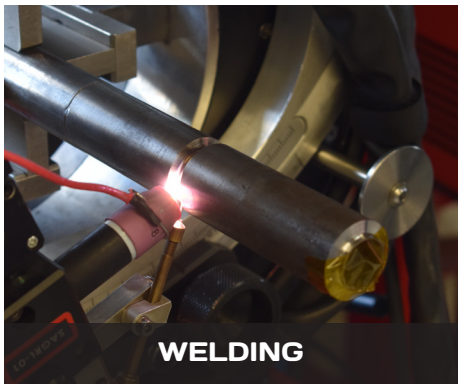

FEATURES AND ADVANTAGES

AXXAIR CC's range (powered by a standard or fast electrical or pneumatic motor) consists of a stainless-steel concentric clamping system with a large number of contact points, increasing the cutting range and quality and avoiding tube distortion. The stainless steel jaws guarantee protection from contamination of the tube. The distinctive rotation wheel offers a smooth rotation, increasing the life time of the cutting blade and the cutting quality. Optionally, an automatic rotation and clamping system can be fitted on the CC range, allowing for higher and faster repeatability and productivity. The penetration lever engages the saw blade for effortless and consistent penetration and cutting of the tube, extending the blade life and improving safety and ease of operation. The short blade to jaws distance reduces vibration, extends the blade life and improves cutting quality. AXXAIR offers a wide range of high quality blades performing burr-free square cuts (< 0.25 mm / 0.01" perpendicularity precision) and lubricant oil and paste. The CC models can be fitted with support benches for longer tubes and conversion kits to allow for three different operations: cutting, bevelling and welding.

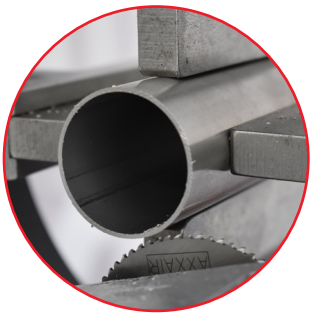

MODELS AND POWER OPTIONS

CC122	CC172	CC222	CC322
TUBE O/D RANGE: 0.25 - 4.5" / 5 - 119 mm	TUBE O/D RANGE: 0.625 - 6.625" / 16 - 173 mm	TUBE O/D RANGE: 2.375 - 8.625" / 55 - 228 mm	TUBE O/D RANGE: 5.563 - 12.750" / 141 - 328 mm

ELECTRIC STANDARD MOTOR (110V/220V)	ELECTRIC FAST MOTOR (110V/220V)	PNEUMATIC
PART NO. XXXFS15/FS25 *	PART NO. XXXFS19/FS29 *	PART NO. XXXPD *

* XXX = MODEL NO. 122 / 172 / 222 / 322

ACCESSORIES AND OPTIONS

TRIPOD STAND

PART NO. CCPS21

SUPPORT BENCHES

PART NO. CCBSB-X1
PART NO. CCBSB-X2

SUPPORT BENCHES
WITH END STOP SYSTEM

PART NO. CCBSB-XX-X-XX **

AUTOMATIC ROTATION

Measures and displays the cutting / bevelling motor's power consumption

PART NO. SAEX-00

AUTOMATIC ROTATION & CLAMPING SYSTEM

PART NO. XXX-AU

CONVERSION KITS

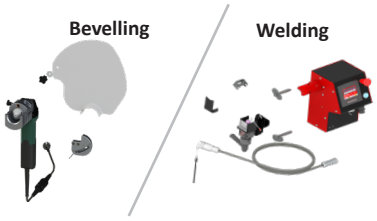

PART NO. GA10-M1-XXX / SX-2KITX **
PART NO. GA10-M2-XXX / SX-3KITX **

* XXX = MODEL NO. 122 / 172 / 222 / 322
** REFER TO: ORBITAL CUTTING & BEVELLING MACHINES ACCESSORIES & CONSUMABLES

CC RANGE TECHNICAL FEATURES

* depending on type of saw blade used and tube material

DESCRIPTION	MEASUREMENT	CC122			CC172		
Power		Electric standard motor	Electric fast motor	Pneumatic	Electric standard motor	Electric fast motor	Pneumatic
Part No.	n/a	122FS15 122FS25	122FS19 122FS29	122PD	172FS15 172FS25	172FS19 172FS29	172PD
Diameter range	mm (o/d)	5 - 119			16 - 173		
Diameter range	inch (o/d)	0.25 - 4.5			0.625 - 6.625		
Cutting capacity *	mm / inch	up to 15 / 0.6"	up to 15 / 0.6"	up to 15 / 0.6"	up to 15 / 0.6"	up to 15 / 0.6"	up to 15 / 0.6"
Blade rotational speed	rpm	30 - 75	95 - 280	60 - 110	30 - 75	95 - 280	60 - 110
Electric motor power	watt	1200	1200	n/a	1200	1200	n/a
Voltage	volt	110 or 220	110 or 220	n/a	110 or 220	110 or 220	n/a
Frequency	Hz	50 / 60	50 / 60	n/a	50 / 60	50 / 60	n/a
Air working pressure	psi / bar	n/a	n/a	43.5 - 87 / 3 - 6	n/a	n/a	43.5 - 87 / 3 - 6
Max acoustic radiation	dB	90	90	95	90	90	95
Vibration level	m/s^2	<2.5	<2.5	n/a	<2.5	<2.5	n/a
Unit weight	kg / lbs	44 / 97	44 / 97	44 / 97	51 / 112	51 / 112	51 / 112
Machine dimensions	mm	443 x 541 x 304 mm			493 x 566 x 304 mm		
Machine dimensions	inch	17.44 x 21.29 x 11.96"			19.40 x 22.28 x 11.96"		
Packing dimensions	mm	630 x 450 x 720			630 x 450 x 720		
Packing dimensions	inch	24.80 x 17.72 x 28.35”			24.80 x 17.72 x 28.35”		
Packing weight	kg / lbs	62 / 136.7			68 / 150		

DESCRIPTION	MEASUREMENT	CC222			CC322		
Power		Electric standard motor	Electric fast motor	Pneumatic	Electric standard motor	Electric fast motor	Pneumatic
Part No.	n/a	222FS15 222FS25	222FS19 222FS29	222PD	322FS15 322FS25	322FS19 322FS29	322PD
Diameter range	mm (o/d)	55 - 228			141 - 328		
Diameter range	inch (o/d)	2.375 - 8.625			5.563 - 12.750		
Cutting capacity *	mm / inch	up to 15 / 0.6"	up to 15 / 0.6"	up to 15 / 0.6"	up to 15 / 0.6"	up to 15 / 0.6"	up to 15 / 0.6"
Blade rotational speed	rpm	30 - 75	95 - 280	60 - 110	30 - 75	95 - 280	60 - 110
Electric motor power	watt	1200	1200	n/a	1200	1200	n/a
Voltage	volt	110 or 220	110 or 220	n/a	110 or 220	110 or 220	n/a
Frequency	Hz	50 / 60	50 / 60	n/a	50 / 60	50 / 60	n/a
Air working pressure	psi / bar	n/a	n/a	43.5 - 87 / 3 - 6	n/a	n/a	43.5 - 87 / 3 - 6
Max acoustic radiation	dB	90	90	95	90	90	95
Vibration level	m/s^2	<2.5	<2.5	n/a	<2.5	<2.5	n/a
Unit weight	kg / lbs	59 / 130	59 / 130	59 / 130	71 / 157	71 / 157	71 / 157
Machine dimensions	mm	548 x 594 x 304 mm			649 x 644 x 304 mm		
Machine dimensions	inch	21.57 x 23.38 x 11.96"			25.55 x 25.35 x 11.96"		
Packing dimensions	mm	1,000 x 570 x 870			1,000 x 570 x 870		
Packing dimensions	inch	39.37 x 22.44 x 34.25			39.37 x 22.44 x 34.25		
Packing weight	kg / lbs	87 / 192			100 / 220		

Our group policy is one of continuous improvement. Products and data tables are subject to change and may vary from those illustrated.

- Each machine is supplied in a wooden crate
- All motors are supplied in their own individual cases, including the necessary tools for operating the machine

CC RANGE - CC421 / CC521 / CC721 / CC1100 ORBITAL CUTTING MACHINES

8.625 - 42.52" o/d / 212 - 1,080 mm o/d

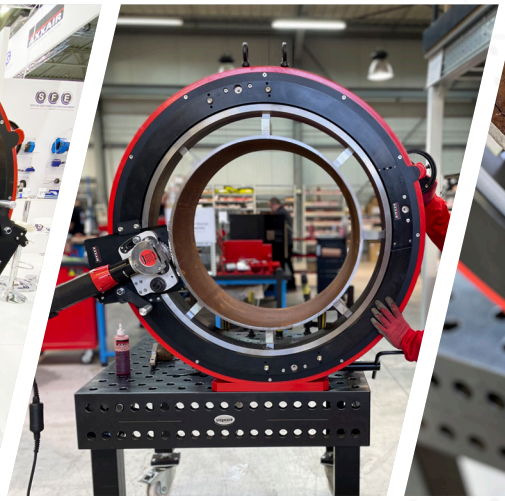

SCAN QR CODE
TO WATCH VIDEO

AXXAIR
AN SPG GROUP BRAND

www.AXXAIR.com

CC RANGE: CC421 / CC521 / CC721 / CC1100

8.625 - 42.52" o/d / 212 - 1,080 mm o/d

- **Functions:** Orbital tube/pipe cutting
- **Materials:** Any type of steel and exotic alloy
- **Power:** Pneumatic or electric 1200 W (110V or 220V)

During **orbital cutting** a saw blade rotates around the tube to perform the cut, delivering a square cut while maintaining the roundness of the tube. There is no distortion due to cutting forces, as the blade follows the tube section.

AXXAIR's CC range of orbital cutting machines offers not only the ***largest orbital cutting range*** in the world: from 0.25" / 5 mm up to 42.52" / 1,080 mm, but also unrivaled versatility, flexibility, productivity and efficiency. The cutting capacity goes up to 15 mm / 0.6".

FEATURES AND ADVANTAGES

AXXAIR CC's range (powered by a standard or fast electrical or pneumatic motor) consists of a stainless-steel concentric clamping system with a large number of contact points, increasing the cutting range and quality and avoiding tube distortion. The stainless steel jaws guarantee protection from contamination of the tube.

The distinctive rotation wheel offers a smooth rotation, increasing the life time of the cutting blade and the cutting quality. Optionally, an automatic rotation and clamping system can be fitted on the CC range, allowing for higher and faster repeatability and productivity.

The penetration lever engages the saw blade for effortless and consistent penetration and cutting of the tube, extending the blade life and improving safety and ease of operation. The short blade to jaws distance reduces vibration, extends the blade life and improves cutting quality.

AXXAIR offers a wide range of high quality blades performing burr-free square cuts (< 0.4 mm / 0.015" perpendicularity precision) and lubricant oil and paste. The CC models can be fitted with support benches for longer tubes.

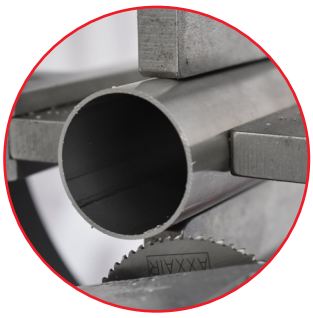

MODELS AND POWER OPTIONS

CC421	CC521	CC721	CC1100
			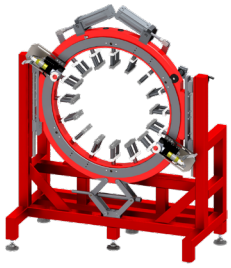
TUBE O/D RANGE: 8.625 - 16" / 212 - 422 mm	TUBE O/D RANGE: 12.75 - 20" / 312 - 522 mm	TUBE O/D RANGE: 18 - 28" / 447 - 725 mm	TUBE O/D RANGE: 28 - 42.52" / 711 - 1,080 mm

ELECTRIC STANDARD MOTOR (110V/220V)	ELECTRIC FAST MOTOR (110V/220V)	PNEUMATIC
PART NO. XXXFS15/FS25 *	PART NO. XXXFS19/FS29 *	PART NO. XXXPD *

* XXX = MODEL NO. 421 / 521 / 721 / 1100

ACCESSORIES AND OPTIONS

ADJUSTABLE HEIGHT TABLE	SUPPORT BENCHES	AUTOMATIC ROTATION
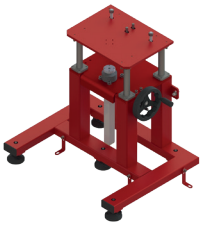	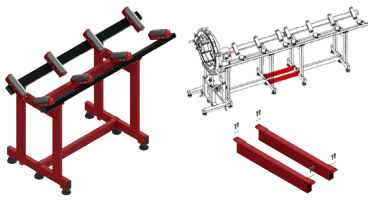	 Measures and displays the cutting / bevelling motor's power consumption
PART NO. CCBSB2-003	PART NO. CCBSB2-004/005	PART NO. SAEX-000

CC RANGE TECHNICAL FEATURES

* depending on type of saw blade used and tube material

DESCRIPTION	MEASUREMENT	CC421			CC521		
Power		Electric standard motor	Electric fast motor	Pneumatic	Electric standard motor	Electric fast motor	Pneumatic
Part No.	n/a	421FS15 421FS25	421FS19 421FS29	421PD	521FS15 521FS19	521FS25 521FS29	521PD
Diameter range	mm (o/d)	212 - 422			312 - 522		
Diameter range	inch (o/d)	8.625 - 16			12.75 - 20		
Cutting capacity *	mm / inch	up to 15 / 0.6	up to 15 / 0.6	up to 15 / 0.6	up to 15 / 0.6	up to 15 / 0.6	up to 15 / 0.6
Blade rotational speed	rpm	30 - 75	95 - 280	60 - 110	30 - 75	95 - 280	60 - 110
Electric motor power	watt	1200	1200	n/a	1200	1200	n/a
Voltage	volt	110 / 220	110 / 220	n/a	110 / 220	110 / 220	n/a
Frequency	Hz	50 - 60	50 - 60	n/a	50 - 60	50 - 60	n/a
Air working pressure	psi / bar	n/a	n/a	43.5 - 87 / 3 - 6	n/a	n/a	43.5 - 87 / 3 - 6
Max acoustic radiation	dB	90	90	95	90	90	95
Vibration level	m/s^2	< 2.5	< 2.5	n/a	< 2.5	< 2.5	n/a
Unit weight	kg / lbs	195 / 429.9			223 / 491.6		
Machine dimensions	mm	802 x 838 x 315			905 x 889 x 315		
Machine dimensions	inch	31.57 x 32.99 x 12.40			35.62 x 35 x 12.40		
Packing dimensions	mm	600 x 1,020 x 1,140			848 x 1,020 x 1,139		
Packing dimensions	inch	23.62 x 40.16 x 44.88			33.39 x 40.16 x 44.88		
Packing weight	kg / lbs	186 / 410			223 / 492		

DESCRIPTION	MEASUREMENT	CC721			CC1100	
Power		Electric standard motor	Electric fast motor	Pneumatic	Electric motor	Pneumatic
Part No.	n/a	721FS15 721FS25	721FS19 721FS29	721PD	Upon request (adjustable height table, support bench and automatic rotation included)	
Diameter range	mm (o/d)	447 - 725			711.2 - 1,080 (pneumatic clamping system)	
Diameter range	inch (o/d)	18 - 28			28 - 42.52 (pneumatic clamping system)	
Cutting capacity *	mm / inch	up to 15 / 0.6	up to 15 / 0.6	up to 15 / 0.6	up to 8 / 0.3	
Blade rotational speed	rpm	30 - 75	95 - 280	60 - 110	Custom built machine upon request	
Electric motor power	watt	1200	1200	n/a	Custom built machine upon request	
Voltage	volt	110 / 220	110 / 220	n/a	110 / 220	n/a
Frequency	Hz	50 - 60	50 - 60	n/a	50 - 60	n/a
Air working pressure	psi / bar	n/a	n/a	43.5 - 87 / 3 - 6	n/a	upon request
Max acoustic radiation	dB	90	90	95	90	95
Vibration level	m/s^2	< 2.5	< 2.5	n/a	< 2.5	n/a
Unit weight	kg / lbs	256 / 564.4			1,100 / 2,425	
Machine dimensions	mm	1,104 x 1,077 x 315			2,505 x 2,030 x 950	
Machine dimensions	inch	44.88 x 42.40 x 12.40			98.62 x 79.92 x 37.40	
Packing dimensions	mm	648 x 1,220 x 1,340			2,655 x 2,116 x 1,152	
Packing dimensions	inch	25.51 x 48.03 x 52.76			104.53 x 83.30 x 45.35	
Packing weight	kg / lbs	256 / 564			1,330 / 2,932	

Our group policy is one of continuous improvement. Products and data tables are subject to change and may vary from those illustrated.

- Each machine is supplied in a wooden crate
- All motors are supplied in their own individual cases, including the necessary tools for operating the machine

AXXAIR CUTTING MACHINES IN OPERATION

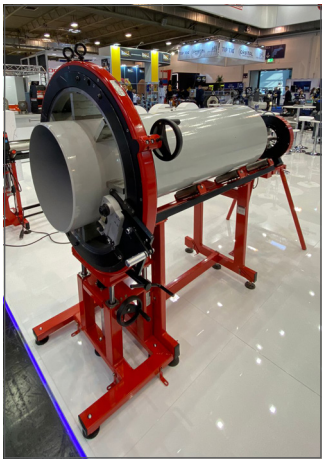

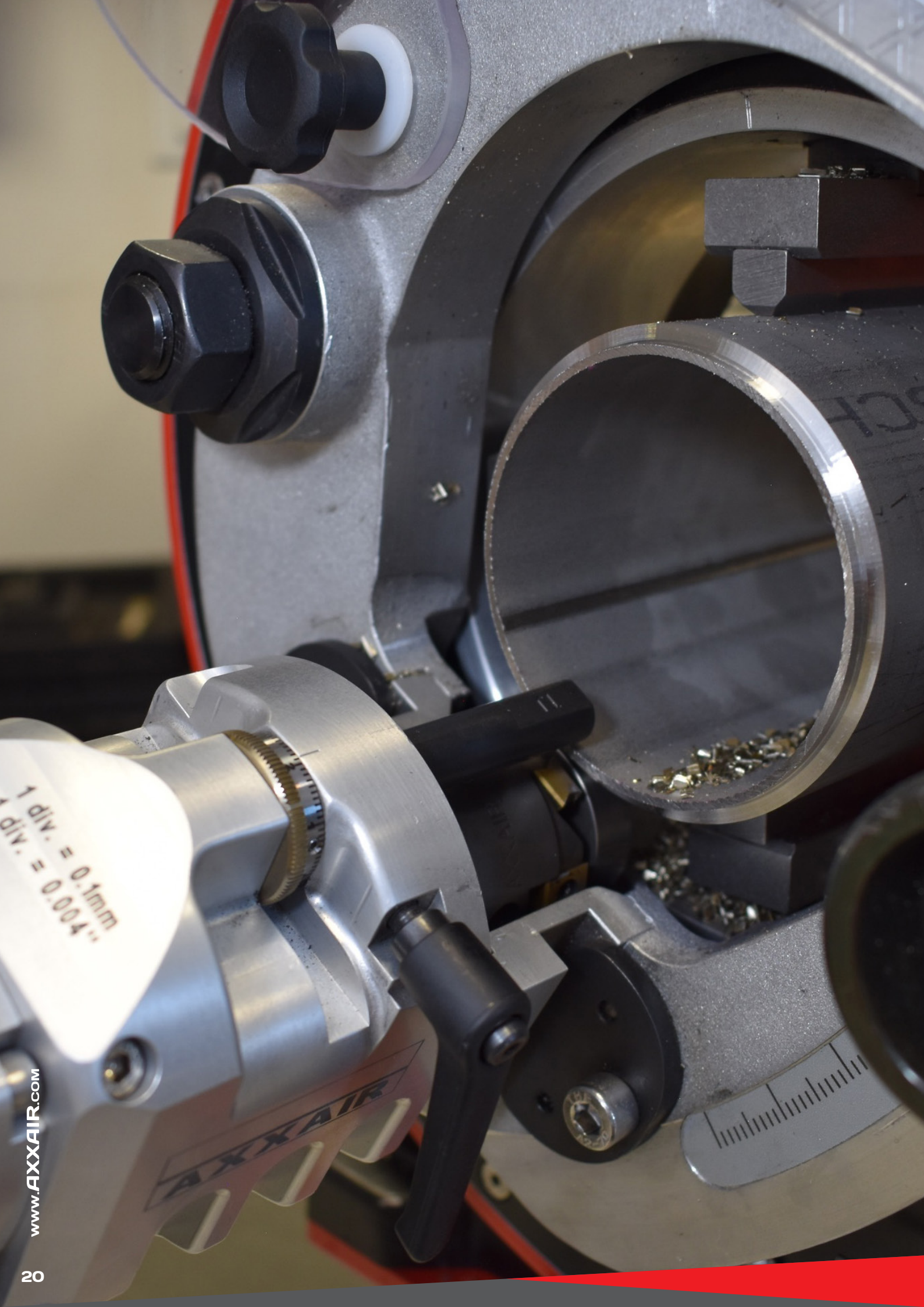
1 div. = 0.1mm
1 div. = 0.004"
AXXAIR

GA RANGE - GA122 / GA172 / GA222 / GA322 ORBITAL BEVELLING MACHINES

0.625 - 12.750" o/d / 15 - 328 mm o/d

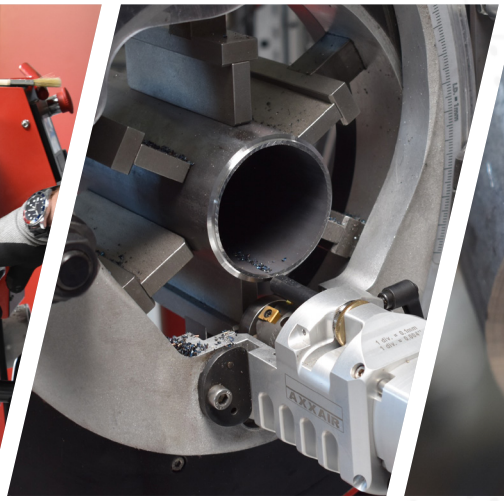

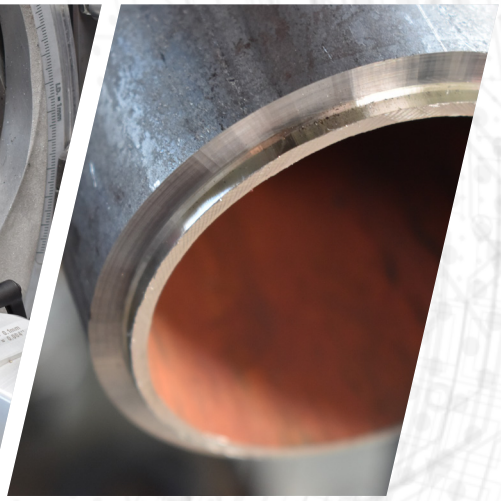

SCAN QR CODE TO WATCH VIDEO

AXXAIR
AN SPG GROUP BRAND

www.AXXAIR.com

GA RANGE: GA122 / GA172 / GA222 / GA322

0.625 - 12.750" o/d / 15 - 328 mm o/d

- **Functions:** External pipe bevelling
- **Materials:** Any type of steel and exotic alloy
- **Power:** Electric (110V or 220V)

The weld preparation of the tube (process of bevelling), prior to the welding is of utmost importance. Its quality will be essential for a successful manual or orbital welding process.

The AXXAIR CC range's machines' bodies CC 122 / 172 / 222 / 322 offer a high level of modularity. By only setting two screws, conversion kits can be mounted onto the body, allowing the operator to use the CC range's machines for three applications: tube cutting, bevelling and welding.

By adding the bevelling conversion kit, consisting of a 1700W electrical motor and the selected milling head fitted with carbide inserts, the bodies can be easily converted for bevelling applications, leading to the AXXAIR GA range.

On the AXXAIR GA range's machines milling heads are fitted with carbide inserts, which rotate at a high speed removing a large quantity of material in a single rotation around the tube. This carbide insert process is 10x faster than traditional beveling processes while being safer and more repeatable.

This patented process avoids the need for lubricants and require minimal cleaning of the tube before welding.

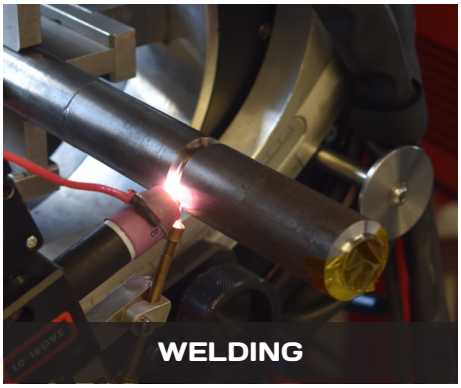

FEATURES AND ADVANTAGES

AXXAIR GA's range (powered by an electrical 110 or 220v motor) consists of a stainless-steel concentric clamping system with a large number of contact points, increasing the bevelling range and quality and avoiding tube distortion. The stainless steel jaws guarantee protection from contamination of the tube.

The distinctive rotation wheel offers a smooth rotation, increasing the life time of the carbide bevel inserts and the bevel quality. Optionally, an automatic rotation and clamping system can be fitted on the GA range, allowing for higher and faster repeatability and productivity. The carbide inserts provide a higher and faster performance than traditional HSS inserts and are available as standard in V-bevel type (30° / 37,5° / 45°) and J-bevel type (10°) *.

The spring loaded penetration lever and tracking system engage the saw blade for effortless and consistent bevelling of the tube, extending the inserts' life and improving safety and ease of operation.

The GA models can be fitted with support benches for longer tubes and conversion kits to allow for three different operations: cutting, bevelling and welding.

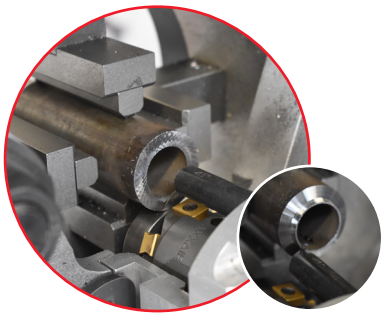

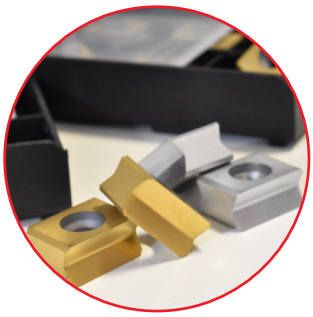

* REFER TO: ORBITAL CUTTING & BEVELLING MACHINES ACCESSORIES & CONSUMABLES

MODELS AND POWER OPTIONS

GA122	GA172	GA222	GA322
TUBE O/D RANGE: 0.625 - 4.5" / 15 - 119 mm	TUBE O/D RANGE: 1.3 - 6.625" / 33 - 173 mm	TUBE O/D RANGE: 2.35 - 8.625" / 55 - 228 mm	TUBE O/D RANGE: 5.5 - 12.750" / 141 - 328 mm
PART NO. GA122-M1 (110V) PART NO. GA122-M2 (220V)	PART NO. GA172-M1 (110V) PART NO. GA172-M2 (220V)	PART NO. GA222-M1 (110V) PART NO. GA222-M2 (220V)	PART NO. GA322-M1 (110V) PART NO. GA322-M2 (220V)

ACCESSORIES AND OPTIONS

MILLING HEAD 30° V BEVEL	MILLING HEAD 37.5° V BEVEL	MILLING HEAD 45° V BEVEL	MILLING HEAD 10° J BEVEL
supplied with 3 inserts	supplied with 3 inserts	supplied with 3 inserts	supplied with 6 inserts
PART NO. GV-300	PART NO. GV-375	PART NO. GV-450	PART NO. GJ-100

TRIPOD STAND	SUPPORT BENCHES	SUPPORT BENCHES WITH END STOP SYSTEM
	 CCBSB-X1 CCBSB-X2	
PART NO. CCPS21	PART NO. CCBSB-X1 PART NO. CCBSB-X2	PART NO. CCBSB-XX-X-XX **

AUTOMATIC ROTATION	AUTOMATIC ROTATION & CLAMPING SYSTEM	CONVERSION KITS
 Measures and displays the cutting / bevelling motor's power consumption		CUTTING WELDING
PART NO. SAEX-00	PART NO. XXX-AU *	CUTTING: PART NO. FS-XX or MOPD WELDING: PART NO. SX-2KITX / SX-3KITX **

* XXX = MODEL NO. 122 / 172 / 222 / 322

** REFER TO: ORBITAL CUTTING & BEVELLING MACHINES ACCESSORIES & CONSUMABLES

CONSUMABLES

TITANIUM COATED CARBIDE INSERTS

PART NO. PC30-08-B02

MICROGRAIN CARBIDE INSERTS

PART NO. PC30-08-B03

INSERT LOCKING SCREW

PART NO. KS30

GA RANGE TECHNICAL FEATURES

DESCRIPTION	MEASUREMENT	GA122	GA172	GA222	GA322
Part No.	n/a	GA122-M1 / GA122-M2	GA172-M1 / GA172-M2	GA222-M1 / GA222-M2	GA322-M1 / GA322-M2
Diameter range	mm (o/d)	15 - 119	33 - 173	55 - 228	141 - 328
Diameter range	inch (o/d)	0.625 - 4.5	1.3 - 6.625	2.35 - 8.625	5.5 - 12.750
Bevelling wall thickness capacity *	mm / inch	upto 8 mm / 0.3	upto 8 mm / 0.3	upto 8 mm / 0.3	upto 8 mm / 0.3
Milling head rotational speed	rpm	2050 - 7300	2050 - 7300	2050 - 7300	2050 - 7300
Electric motor power	watt	1700	1700	1700	1700
Voltage	volt	110 or 220	110 or 220	110 or 220	110 or 220
Frequency	Hz	50 / 60	50 / 60	50 / 60	50 / 60
Air working pressure	psi / bar	n/a	n/a	n/a	n/a
Max acoustic radiation	dB	99	99	99	99
Vibration level	m/s^2	<2.5	<2.5	<2.5	<2.5
Unit weight	kg / lbs	42 / 93	49 / 108	57 / 126	71 / 157
Machine dimensions	mm	443 x 541 x 304	493 x 566 x 304	548 x 594 x 304	649 x 644 x 304
Machine dimensions	inch	17.44 x 21.29 x 11.96	19.40 x 22.28 x 11.96	21.57 x 23.38 x 11.96	25.55 x 25.35 x 11.96
Packing dimensions	mm	630 x 450 x 720	630 x 450 x 720	950 x 550 x 850	950 x 550 x 850
Packing dimensions	inch	24.80 x 17.72 x 28.35	24.80 x 17.72 x 28.35	37.40 x 21.65 x 33.46	37.40 x 21.65 x 33.46
Packing weight	kg / lbs	48 / 106	54 / 119	64 / 141	80 / 176
Our group policy is one of continuous improvement. Products and data tables are subject to change and may vary from those illustrated.					

*** depending on type of inserts used and tube material**

- Each machine is supplied in a protective custom built box
- Service tools, drawings, instruction manual and warranty certificate are supplied as standard

ORBITAL CUTTING & BEVELLING MACHINES ACCESSORIES & CONSUMABLES

AXXAIR
AN SPG GROUP BRAND

www.AXXAIR.com

COMPLETE PROCESS: 1 MACHINE - 3 APPLICATIONS

The CC range's machines' bodies offer a high level of modularity. By only setting two screws, conversion kits can be mounted onto the body, allowing the operator to use the CC range's machines for three applications: **tube cutting, bevelling and welding.**

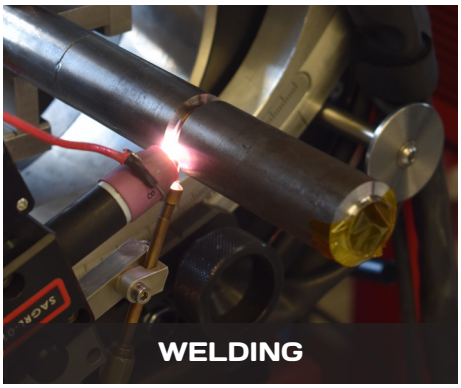

CONVERSION KITS FOR CUTTING, BEVELLING & WELDING

CUTTING MOTORS

PART NO.	DESCRIPTION	WEIGHT		PICTURE
FS15	Double shafted standard motor (elbow cutting) 120V	5 kg	11 lbs	
FS19	Double shafted fast motor (elbow cutting) 120V	5 kg	11 lbs	
FS25	Double shafted standard motor (elbow cutting) 230V	5 kg	11 lbs	
FS29	Double shafted fast motor (elbow cutting) 230V	5 kg	11 lbs	
MOPD	Double shafted pneumatic motor (elbow cutting)	5 kg	11 lbs	

BEVELLING CONVERSION KIT

PART NO.	DESCRIPTION	WEIGHT		PICTURE
GA10-M1-122 / GA10-M2-122	Bevelling motor kit 120V / 230V for body 122	7.6 kg	16.7 lbs	*
GA10-M1-172 / GA10-M2-172	Bevelling motor kit 120V / 230V for body 172	7.6 kg	16.7 lbs	
GA10-M1-222 / GA10-M2-222	Bevelling motor kit 120V / 230V for body 222	7.6 kg	16.7 lbs	
GA10-M1-322 / GA10-M2-322	Bevelling motor kit 120V / 230V for body 322	7.6 kg	16.7 lbs	

*** The kit includes: motor, chip shield, workpiece guide tailored to the frame**

WELDING TORCH KIT (INCLUDING AUTOMATIC ROTATION)

PART NO.	DESCRIPTION	PICTURE
SX-2KITA	Orbital prefabrication welding conversion kit- with AIR cooled torch	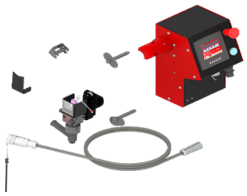 *
SX-2KITE	Orbital prefabrication welding conversion kit - with WATER cooled torch	
SX-2KITNAOF	Orbital prefabrication welding conversion kit with AVC/OSC system - WATER cooled torch	

*** The kit requires an AXXAIR SAXX welding power source**

WELDING TORCH KIT (NOT INCLUDING AUTOMATIC ROTATION)

When automatic rotation (SAEX-00), or electric clamping (XXX-AU**) is installed, then consider the below references.

PART NO.	DESCRIPTION	PICTURE
SX-3KITA	Orbital prefabrication welding conversion kit- with AIR cooled torch (for XXX-AU) **	*
SX-3KITE	Orbital prefabrication welding conversion kit - with WATER cooled torch (for XXX-AU) **	
SX-3KITNAOF	Orbital prefabrication welding conversion kit with AVC/OSC system - WATER cooled torch (for XXX-AU) **	

*** The kit requires an AXXAIR SAXX welding power source**

**** XXX = MODEL NO. 122 / 172 / 222 / 322**

FOR CC AND GA RANGES: 122 / 172 / 222 / 322

STANDS & SUPPORT BENCHES

TRIPOD STAND

PART NO.	DESCRIPTION	DIMENSIONS		WEIGHT		PICTURE
CCPS21	Tripod stand	40.6 x 12.6 x 4.3"	1,030 x 320 x 110 mm	14.3 kg	30.86 lbs	

- Level adjustement
- Possibility to secure it to the ground
- Storage bin for tools and consumables
- Quick assembly and disassembly

SUPPORT BENCH - WITH HEIGHT ADJUSTMENT

PART NO.	DESCRIPTION	DIMENSIONS		WEIGHT		PICTURE
CCBSB-X1	Support bench with height adjustment	72 x 37 x 20"	1,840 x 950 x 510 mm	57 kg	126 lbs	

- Stainless steel rollers
- Height adjustment crank
- 1,500 mm / 59" long
- Maximum load capacity: 350 kg / 772 lbs
- Diameter min. tube: 5 mm (0,196") / diameter max. tube: 321 mm (12,637")

SUPPORT BENCH - ADDITIONAL SUPPORT BENCH

PART NO.	DESCRIPTION	DIMENSIONS		WEIGHT		PICTURE
CCBSB-X2	Additional support bench	59 x 37 x 20"	1,500 x 950 x 510 mm	38 kg	84 lbs	

- Stainless steel rollers
- 1,500 mm / 59" long
- Maximum load capacity: 350 kg / 772 lbs
- Diameter min. tube: 5 mm (0,196") / diameter max. tube: 321 mm (12,637")

CONNECTION KIT FOR BENCH

PART NO.	DESCRIPTION	DIMENSIONS		WEIGHT		PICTURE
CCBSB-B005	Connection kit for bench CCBSB-X1+X2	4 x 3 x 16"	100 x 80 x 402 mm	3 kg	7 lbs	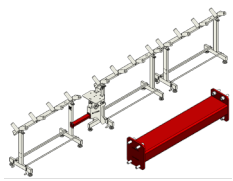

- Allows to connect an additional bench in front of the height adjustable table

FOR ECO RANGE (EXCEPT CC81), CC AND GA RANGES: 122 / 172 / 222 / 322

SUPPORT BENCH - WITH END-STOP SYSTEM

The end stop systems are easy to use and help avoiding measurement errors.

- Delivered by module of 1,500 mm / 59" to be put together
- Max load per module: 350 kg / 772 lbs (evenly distributed)
- Max push on the stop: 10 kg / 22 lbs
- Operating temperature: 0 - 50°C / 32ºF - 122ºF
- Roller and retractable stop gauge in stainless steel

The end stop systems can be mounted on the feed-out or the feed-in section of the cutting machine and are available with a ruler or with a LCD display.

END-STOP WITH RULER

- Ruler in mm
- Equipped with a magnifying lens
- Resolution: 1.0 mm / 0,0393"

END-STOP WITH LCD DISPLAY

- Direction of counting
- Unit of measurement (mm or inches)
- Absolute/relative dimension
- Battery powered
- Resolution: 0.1 mm / 0,0039"

SUPPORT BENCH: FEED-IN AND FEED-OUT ASSEMBLY

FEED-IN ASSEMBLY

The system is delivered with:

- The height-adjustable support bench (CCBSB-X1)
- Additional support benches
- The starting end-stop module and its extensions

FEED-OUT ASSEMBLY

The system is delivered with:

- The support bench module (CCBSB-X2)
- The starting end-stop module and its extensions
- The CCBSB-B005 connection bar

DIMENSIONS

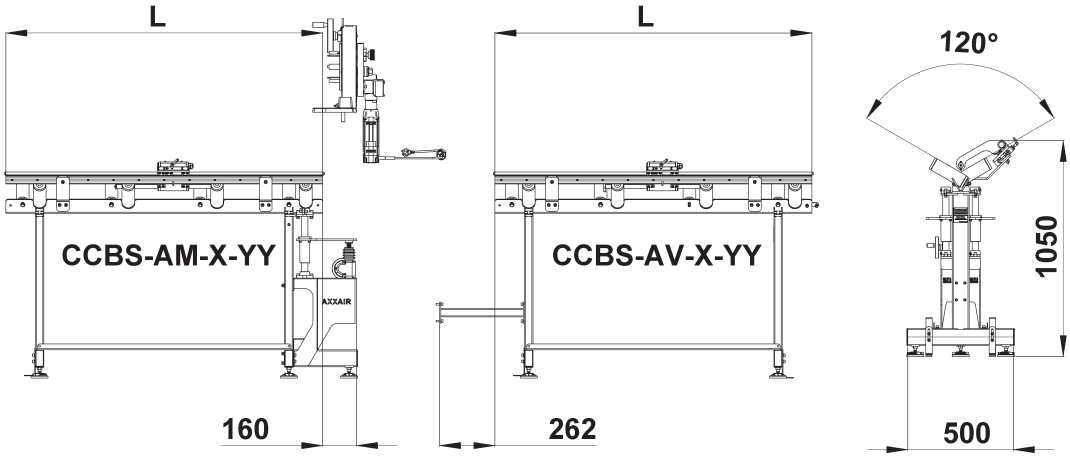

FEED-IN ASSEMBLY

PART NO.	DESCRIPTION	LENGTH	WORKING STROKE	WEIGHT (KG / LBS)	PICTURE
CCBSB-AM-D-15	Height-adjustable support bench + end stop 1.5m / 59", LCD, feed-in assembly	59" / 1,500 mm	51"/ 1,300 mm	65 kg 143 lbs	End stop with LCD display
CCBSB-AM-D-30	Height-adjustable support bench + end stop 3.0m / 118", LCD, feed-in assembly	118" / 3,000 mm	110"/ 2,800 mm	104 kg 229 lbs	
CCBSB-AM-D-45	Height-adjustable support bench + end stop 4.5m / 177", LCD, feed-in assembly	177" / 4,500 mm	169"/ 4,300 mm	143 kg 315 lbs	
CCBSB-AM-D-60	Height-adjustable support bench + end stop 6.0m / 236", LCD, feed-in assembly	236" / 6,000 mm	228"/ 5,800 mm	163 kg 359 lbs	
CCBSB-AM-D-75	Height-adjustable support bench + end stop 7.5m / 295", LCD, feed-in assembly	295"/ 7,500 mm	287"/ 7,300 mm	200 kg 441 lbs	
CCBSB-AM-D-90	Height-adjustable support bench + end stop 9.0m / 354", LCD, feed-in assembly	354"/ 9,000 mm	346"/ 8,800 mm	238 kg 525 lbs	
CCBSB-AM-R-15	Height-adjustable support bench+ end stop 1.5m / 59", ruler,feed-in assembly	59"/ 1,500 mm	51"/ 1,300 mm	65 kg 143 lbs	End stop with ruler
CCBSB-AM-R-30	Height-adjustable support bench+ end stop 3.0m / 118", ruler,feed-in assembly	118"/ 3,000 mm	110"/ 2,800 mm	104 kg 229 lbs	
CCBSB-AM-R-45	Height-adjustable support bench+ end stop 4.5m / 177", ruler,feed-in assembly	177"/ 4,500 mm	169"/ 4,300 mm	143 kg 315 lbs	
CCBSB-AM-R-60	Height-adjustable support bench+ end stop 6.0m / 236", ruler,feed-in assembly	236"/ 6,000 mm	228"/ 5,800 mm	163 kg 359 lbs	
CCBSB-AM-R-75	Height-adjustable support bench+ end stop 7.5m / 295", ruler,feed-in assembly	295"/ 7,500 mm	287"/ 7,300 mm	200 kg 441 lbs	
CCBSB-AM-R-90	Height-adjustable support bench+ end stop 9.0m / 354", ruler,feed-in assembly	354"/ 9,000 mm	346"/ 8,800 mm	238 kg 525 lbs	

The system is delivered with the height-ajustable support bench (CCBSB-X1), additionnal support benches, the starting end stop module and its extensions. A CCBSB-X2 bench can be added to support the tube after the cutting process (in front of the cutting machine) with the CCBSB-B005 connecion kit.

FEED-OUT ASSEMBLY

PART NO.	DESCRIPTION	LENGTH	WORKING STROKE	WEIGHT (KG / LBS)	PICTURE
CCBSB-AV-D-15	Support bench + end stop 1.5m / 59", LCD, feed-out assembly	59" / 1,500 mm	51"/ 1,300 mm	46 kg 101 lbs	End stop with LCD display
CCBSB-AV-D-30	Support bench + end stop 3.0m / 118", LCD, feed-out assembly	118" / 3,000 mm	110"/ 2,800 mm	85 kg 187 lbs	
CCBSB-AV-D-45	Support bench + end stop 4.5m / 177", LCD, feed-out assembly	177" / 4,500 mm	169"/ 4,300 mm	124 kg 273 lbs	
CCBSB-AV-D-60	Support bench + end stop 6.0m / 236", LCD, feed-out assembly	236" / 6,000 mm	228"/ 5,800 mm	163 kg 359 lbs	
CCBSB-AV-D-75	Support bench + end stop 7.5m / 295", LCD, feed-out assembly	295"/ 7,500 mm	287"/ 7,300 mm	201 kg 443 lbs	
CCBSB-AV-D-90	Support bench + end stop 9.0m / 354", LCD, feed-out assembly	354"/ 9,000 mm	346"/ 8,800 mm	240 kg 529 lbs	
CCBSB-AV-R-15	Support bench + end stop 1.5m / 59", ruler, feed-out assembly	59"/ 1,500 mm	51"/ 1,300 mm	46 kg 101 lbs	End stop with ruler
CCBSB-AV-R-30	Support bench + end stop 3.0m / 118", ruler, feed-out assembly	118"/ 3,000 mm	110"/ 2,800 mm	85 kg 187 lbs	
CCBSB-AV-R-45	Support bench + end stop 4.5m / 177", ruler, feed-out assembly	177"/ 4,500 mm	169"/ 4,300 mm	124 kg 273 lbs	
CCBSB-AV-R-60	Support bench + end stop 6.0m / 236", ruler, feed-out assembly	236"/ 6,000 mm	228"/ 5,800 mm	163 kg 359 lbs	
CCBSB-AV-R-75	Support bench + end stop 7.5m / 295", ruler, feed-out assembly	295"/ 7,500 mm	287"/ 7,300 mm	201 kg 443 lbs	
CCBSB-AV-R-90	Support bench + end stop 9.0m / 354", ruler, feed-out assembly	354"/ 9,000 mm	346"/ 8,800 mm	240 kg 529 lbs	

All part numbers containing AV (bench with end stop on the feed-out section) require at least one CCBSB-X1 bench (height-adjustable support bench) to support the cutting machine.

HEIGHT ADJUSTABLE TABLE

PART NO.	DESCRIPTION	DIMENSIONS		WEIGHT		PICTURE
CCBSB2-003	Height adjustable table	30 x 29 x 21"	750 x 730 x 540 mm	53.5 kg	117 lbs	
• Allows for easy and precise height adjustment of the machine						

SUPPORT BENCH

PART NO.	DESCRIPTION	DIMENSIONS		WEIGHT		PICTURE
CCBSB2-004	Additional 1.5m (59") bench	59 x 37 x 28"	1,500 x 950 x 710 mm	70 kg	154 lbs	
• Quick assembly and disassembly • Height adjustment and improved stability with 6 adjustable feet per bench • 1,500 mm / 59" long • Maximum load capacity: 450 kg / 992 lbs • Min / max pipe diameter: 212 - 725 mm / 8.625 - 28"						

CONNECTION KIT FOR BENCH

PART NO.	DESCRIPTION	DIMENSIONS		WEIGHT		PICTURE
CCBSB2-005	Connection kit for bench CCBSB2-004	3.3 x 1.6 x 25.6"	85 x 40 x 650 mm	6.5 kg	14.3 lbs	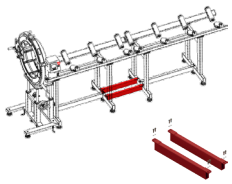
• Allows the height-adjustable table to be connected to an additional bench						

ELECTRIC CLAMPING & AUTOMATIC ROTATION

ELECTRIC CLAMPING KIT

The electric clamping system with adjustable clamping force is the ideal solution for the preparation and/or welding of tubes. It allows to carry out repetitive and constant force tightening tubes with identical diameters and thicknesses, without deforming or marking them.

The kit includes: body frame, automatic rotation and electric clamping.

		MODEL				PICTURE
DESCRIPTION	MEASUREMENT	122	172	222	322	
Part No.	n/a	122AU	172AU	222AU	322AU	
Diameter range	mm (o/d)	5 - 119	16 - 173	55 - 228	141 - 328	
	inch (o/d)	0.25 - 4.5"	0.625 - 6.625"	2.375 - 8.625"	5.563 - 12.750"	
Clamping speed	mm / min	86	86	86	86	
Motor torque	N.m	34	34	34	34	
Nominal voltage	Vdc	24	24	24	24	
Tightening force on the tube	-	850 kg (1,873 lbs) max. adjustable from 15 to 100%	850 kg (1,873 lbs) max. adjustable from 15 to 100%	850 kg (1,873 lbs) max. adjustable from 15 to 100%	850 kg (1,873 lbs) max. adjustable from 15 to 100%	
Unit weight	kg / lbs	51 / 112	58 / 128	66 / 145	80 / 176	
Dimensions (HxLxl)	mm	470 x 498 x 359	520 x 530 x 359	575 x 575 x 359	675 x 662 x 359	
	inch	18.5 x 19.6 x 14.1"	20.5 x 20.9 x 14.1"	22.6 x 22.6 x 14.1"	26.6 x 26 x 14.1"	

MOUNTED ON AXXAIR SUPPORT BENCH

MOUNTED ON OTHER SUPPORT

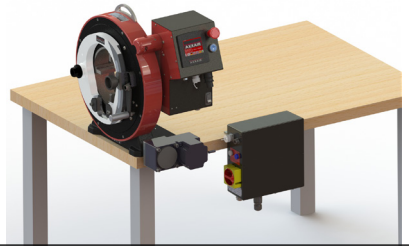

AUTOMATIC ROTATION

The electric rotation is designed to motorize the rotation of the saw frame. Based on tube/pipe parameters, the machine will recommend the optimal feed rate, motor speed and blade. This results in optimal cut time, blade life and cut quality.

- Quick installation and easy to use
- Monitoring electrical strain on the motor (for both cutting or bevelling)
- Fine adjustment of the feed speed during the cut or the bevel
- Safety feature: automatic shut-off
- 3 different languages: English, French and German
- Dual unit of measure: imperial or metric
- Available in 110 V to 220 V

PART NO.	DESCRIPTION	NET WEIGHT		DIMENSIONS		FOR MODEL				PICTURE
SAEX-00	Automatic electric feed for 122/172/222/322 (autoline 110V-220V)	6.3 kg	14 lbs	320 x 261 x 193 mm	12.6 x 10.3 x 7.6"	CC122 GA122	CC172 GA172	CC222 GA222	CC322 GA322	
SAEX-000	Automatic electric feed for 421/ 521/721 (autoline 110V-220V)	6.3 kg	14 lbs	320 x 261 x 193 mm	12.6 x 10.3 x 7.6"	CC421	CC521		CC721	

BLADES

- High speed steel (HSS + cobalt)
- Large range (up to 15mm / 0.590" wall thickness)
- Safety feature
- Tooth design
- Compatible with other brands' cutting machines

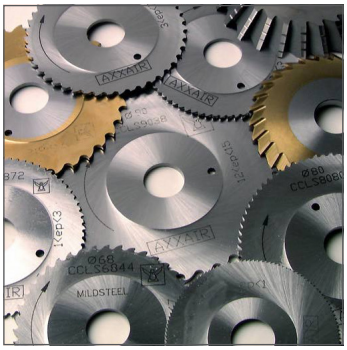

PART NO.	TUBE WALL THICKNESS (MM)	TUBE WALL THICKNESS (INCH)	DIAMETER OF THE BLADE (MM / INCH)		NUMBER OF TEETH	COMPATIBILITY ECO RANGE	COMPATIBILITY CC RANGE
LS63128	0.5 - 0.9	0.02 - 0.04	63	2.480	128	●	●
LS63100	0.7 - 1.5	0.03 - 0.06	63	2.480	100	●	●
LS6364	1 - 3	0.04 - 0.12	63	2.480	64	●	●
LS6844	2 - 7	0.08 - 0.28	68	2.677	44	●	●
LS6872	1 - 3	0.04 - 0.12	68	2.677	72	●	●
LS8034	5 - 12	0.20 - 0.47	80	3.150	34	●	●
LS8054	2 - 7	0.08 - 0.28	80	3.150	54	●	●
LS8080	1 - 3	0.04 - 0.12	80	3.150	80	●	●
LS9038	5 - 15	0.20 - 0.59	90	3.543	38	n/a	●
LCA9028A*	4 - 15	0.15 - 0.59	90	3.543	28	n/a	●
LC300	30° bevelling blade		78	3.071	20	n/a	●
LC375	37.5° bevelling blade		78	3.071	20	n/a	●

*** for carbon steel only, with FS19/FS29 high speed motor**

LUBRICANTS

- 2 types of lubricants: paste or oil

PART NO.	DESCRIPTION	VOLUME	COMPATIBILITY ECO RANGE	COMPATIBILITY CC RANGE	PICTURE
CCLUP	Paste lubricant special	250 mL	●	●	
CCLUH	Oil lubricant	250mL	n/a	●	

CARBIDE INSERTS

AXXAIR's carbide inserts provide an operating speed that is 10x higher then when using an HSS tool. The carbide inserts deliver a consistent bevel with a clean and burr free surface, without altering the tube's material. It does not alter the nature of the material. To increase the insert's life, it is recommended to cut the tube with an AXXAIR orbital cutting machine.

PART NO.	DESCRIPTION	WEIGHT		PICTURE
PC30-08-B02	Box of 10 titanium coated carbide inserts, reversible with 4 cutting edges for orbital bevelling. Usable with : • Low rotation speeds on the following materials: plastic, aluminum and copper types: PVC, aluminum T6, copper / nickel-plated, bronze • High rotation speeds on carbon and stainless steels: 304 / 304L / 316L and A106 steel • Useable with all AXXAIR milling heads • Inserts useable on 4 sides • Always change all inserts at the same time	70g	2.47 oz	
PC30-08-B03	Box of 10 micrograin carbide inserts, coated with a high wear resistance treatment. Depending on the material, the tool rotation speeds must be adapted and the use of automatic rotation is recommended. Recommended for **high alloyed stainless steels:** Duplex, inconel, super-duplex (316TIN / C-22 / C-4/625) • Useable with all AXXAIR milling heads • Inserts useable on 4 sides • Always change all inserts at the same time	70g	2.47 oz	
KS30	Carbide insert fixing screw	1g	0.03 oz	

MILLING HEADS

AXXAIR offers multiple standard milling heads.

PART NUMBER	DESCRIPTION	NET WEIGHT		PICTURE
GV-300	30° V bevel milling head, stop gauge and vernier. Supplied with a roller and 3 carbide TIN coated inserts This milling head can remove up to 8 mm / 0.315" of material.	1 kg	2.2 lbs	30°V 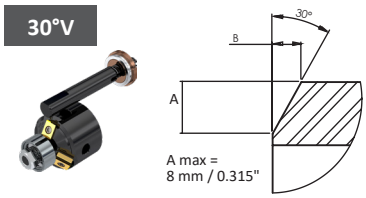
GV-375	37,5° V bevel milling head, stop gauge and vernier. Supplied with a roller and 3 carbide TIN coated inserts. This milling head can remove up to 7 mm / 0.276" of material.	1 kg	2.2 lbs	37.5°V 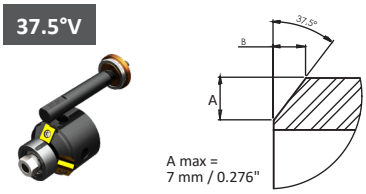
GV-450	45° V bevel milling head, stop gauge and vernier. Supplied with a roller and 3 carbide TIN coated inserts. This milling head can remove up to 6.5 mm / 0.256" of material.	1 kg	2.2 lbs	45°V 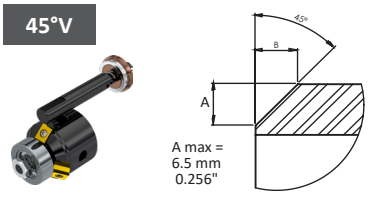
GJ-100	10° J bevel milling head, stop gauge and vernier. Supplied with 6 rollers and 6 carbide TIN coated inserts. This milling head can remove up to 8 mm / 0.315" of material. **This shape is recommended for automated welding processes and especially for orbital welding.**	1 kg	2.2 lbs	10°J 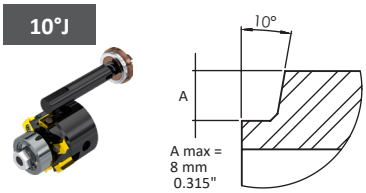

AXXAIR
DCN25-12.70
DCN25-12.70
DCN25-09.53

TUBE FACING & SQUARING MACHINES

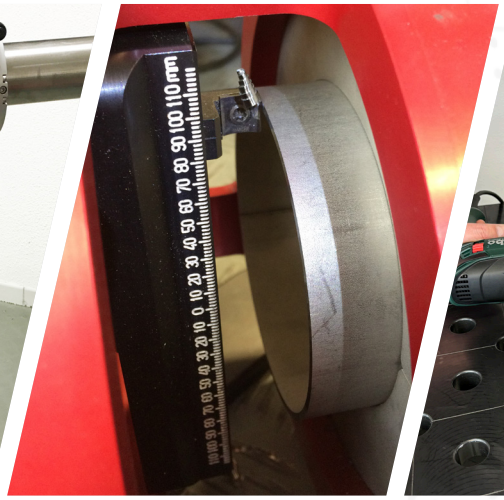

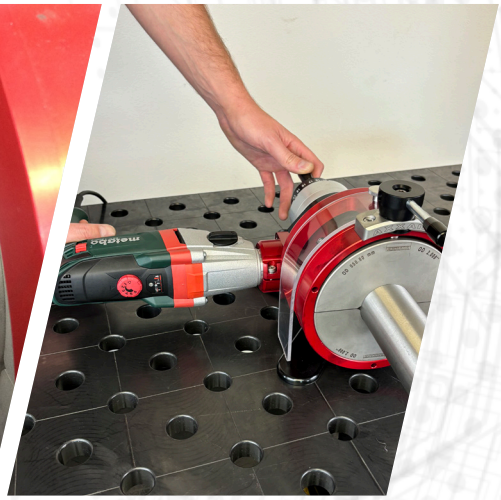

AXXAIR
AN SPX GROUP BRAND

www.AXXAIR.com

FACING MACHINE
Type : DC65-MSE
N°: AIZA1801013
Date : 2018/01
AXXAIR
metabo

DC RANGE - DC25 / DC65
TUBE FACING & SQUARING MACHINES

0.1 - 2.5" o/d / 3 - 63.5 mm o/d

SCAN QR CODE TO WATCH VIDEO

AXXAIR
AN SPG GROUP BRAND

www.AXXAIR.com

DC25 / DC65 TUBE FACING & SQUARING MACHINES

0.1 - 2.5" o/d / 3 - 63.5 mm o/d

- **Functions:** Tube facing / facing in position / deburring (max thickness 3 mm - 0.118")
- **Materials:** All types of steel and alloys
- **Power:** Battery or electric 1300W (110V or 220V)

Orbital facing machines are advanced and useful equipment used to precisely prepare the ends of tubes and pipes, particularly those with thin walls and small diameters. AXXAIR's DC range ensure that the tube ends are perpendicular to the tube axis, burr free, and have a smooth surface finish, essential for high-quality welding and assembly.

Unlike traditional cutting methods, which can leave irregularities and burrs, orbital facing provides a clean and accurate finish. This process is especially important in industries where precision and reliability are paramount, such as aerospace, pharmaceutical and semiconductors industries.

FEATURES AND ADVANTAGES

The AXXAIR DC25 and DC65 orbital facing models are portable, lightweight machines, ideal for both workshop and in situ applications. They are both available in electrical (110 / 220v) and battery version.

The stainless steel collets guarantee a perfect clamping on the tube. The set up, locking and machining of the tube is made easy by the spring loaded handle, indexable wrist, large opening pivot and graduated vernier scale that allows for precise advancement.

Burr-free tube facing, edge breaking and bevelling (only for DC65 model, 30° & 45° only) can be done by selecting the required high quality HSS TIALN inserts.

On the DC65 model, two tools can be used simultaneously and also facing and bevelling can be performed in a single operation.

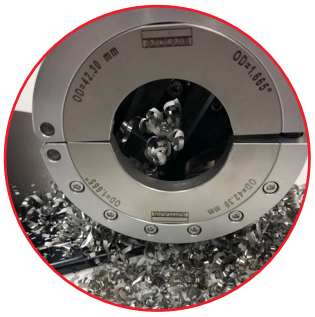
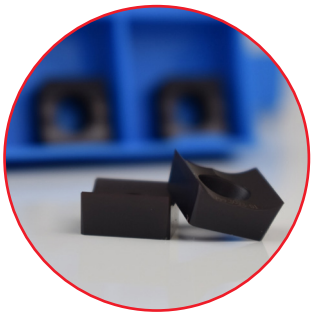

MODELS AND POWER OPTIONS

DC25 - BATTERY	DC65 - BATTERY	DC25 - ELECTRIC	DC65 - ELECTRIC
TUBE O/D RANGE: 0.1 - 1" / 3 - 25.4 mm	TUBE O/D RANGE: 0.1 - 2.5" / 3 - 63.5 mm	TUBE O/D RANGE: 0.1 - 1" / 3 - 25.4 mm	TUBE O/D RANGE: 0.1 - 2.5" / 3 - 63.5 mm
PART NO. DC25-MA1* (110V) PART NO. DC25-MA2* (220V)	PART NO. DC65-MA1* (110V) PART NO. DC65-MA2* (220V)	PART NO. DC25-MS1 (110V) PART NO. DC25-MS2 (220V)	PART NO. DC65-MS1 (110V) PART NO. DC65-MS2 (220V)
Brushless motor 18V: 2 mechanical speed and electric speed variator. Delivered with two 18V Li-Power 5.2 Ah batteries and a fast battery charger.		Metabo motor 1300W: 2 mechanical speeds and electric speed variator. High rotation torque.	

DC25 / DC65 TECHNICAL FEATURES

DESCRIPTION	MEASUREMENT	DC25		DC65	
POWER		BATTERY*	ELECTRIC	BATTERY*	ELECTRIC
Part No.	n/a	DC25-MA1* /DC25-MA2*	DC25-MS1 / DC25-MS2	DC65-MA1*/ DC65-MA2*	DC65-MS1 / DC65-MS2
Diameter range	mm (o/d)	3 - 25.4	3 - 25.4	3 - 63.5	3 - 63.5
Diameter range	inch (o/d)	0.1 - 1	0.1 - 1	0.1 - 2.5	0.1 - 2.5
Bevelling wall thickness capacity	mm / inch	3.0 mm / 0.118" max.		3.0 mm / 0.118" max.	
Minimal straight length of tube with standard jaws	mm / inch	9 / 0.354	9 / 0.543	10 / 0.393	10 / 0.393
Minimal straight lenght of tube with microfitting jaws	mm / inch	5 / 0.196	5 / 0.196	n/a	n/a
Idle speed	rpm	Speed 1: 0 - 500 Speed 2: 0 - 1700	Speed 1: 180 - 1080 Speed 2: 510 - 3100	Speed 1: 0 - 67 Speed 2: 0 - 227	Speed 1: 24 - 144 Speed 2: 68 - 413
Electric motor power	watt	n/a	1300	n/a	1300
Voltage	volt	18	110 / 220	18	110 / 220
Frequency	Hz	charger 50 / 60	50 / 60	charger 50 / 60	50 / 60
Air working pressure	psi / bar	n/a	n/a	n/a	n/a
Max acoustic radiation	dB	82	83	85	83
Vibration level	m/s^2	<2.5	<2.5	<2.5	<2.5
Unit weight	kg / lbs	2.5 / 5.51	2.5 / 5.51	5.5 / 12.12	5.5 / 12.12
Machine dimensions	mm	285 x 220 x 75	300 x 370 x 76	139 x 254 x 325	132 x 393 x 340
Machine dimensions	inch	11.22 x 8.66 x 2.95	11.81 x 14.57 x 2.99	5.47 x 10 x 12.79	5.20 x 13.47 x 13.38
Packing dimensions	mm	480 x 350 x 180		430 x 580 x 230	
Packing dimensions	inch	18.9 x 13.78 x 7.08		16.93 x 22.83 x 90.5	
Packing weight	kg / lbs	8 / 17.64	7.7 / 15.43	12.2 / 26.45	11.2 / 24.25
Our group policy is one of continuous improvement. Products and data tables are subject to change and may vary from those illustrated.					

*** LOGISTICS NOTE – UN3481 COMPLIANCE**

In accordance with UN3481 regulations governing the transport of lithium batteries, this machine cannot be shipped by air. Authorized transport modes: road and sea only. Any request for air shipment cannot be accommodated. If required, alternative models without battery or charger, compliant with air transport regulations, can be offered : **PART NO. DC25-MA** and **PART NO. DC65-MA**

- Delivered in a shockproof case
- Waterproof and dustproof

DC25 - BATTERY

DC25 - ELECTRIC

DC65 - BATTERY

DC65 - ELECTRIC

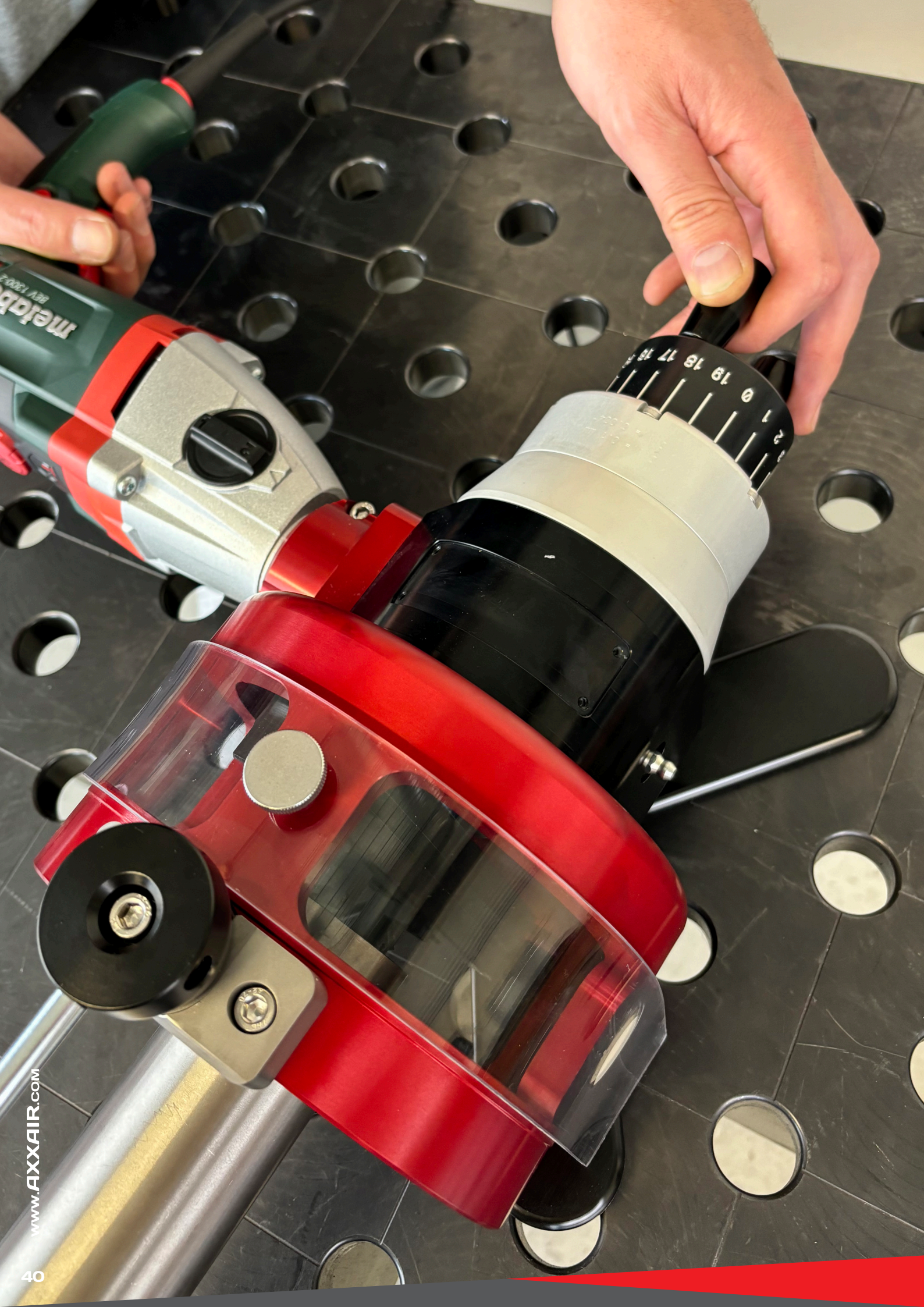
metabo
BSV 1300-2

DC RANGE - DC115 / DC221 WITH CLAMPING JAWS TUBE FACING & SQUARING MACHINES

0.5 - 8.5" o/d / 12 - 220 mm o/d

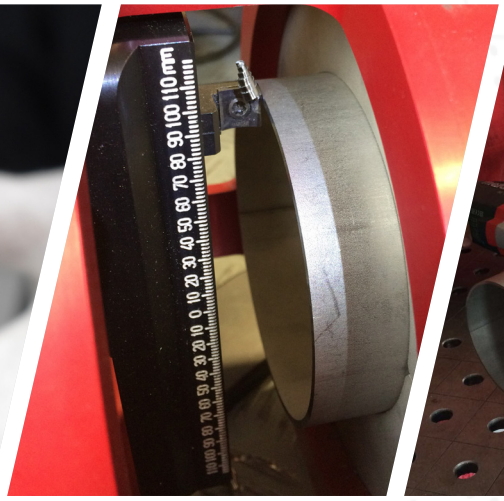

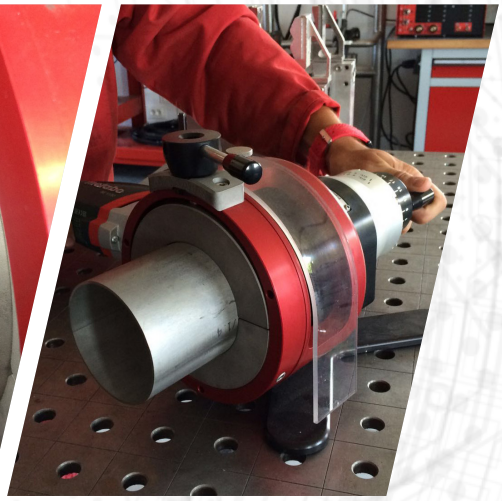

SCAN QR CODE
TO WATCH VIDEO

AXXAIR
AN SPG GROUP BRAND

www.AXXAIR.com

DC115 / DC221 with clamping jaws
TUBE FACING & SQUARING MACHINES

0.5 - 8.5" o/d / 12 - 220 mm o/d

- **Functions:** Tube facing / facing in position / deburring / bevelling (max. thickness 3mm - 0.118")
- **Materials:** All types of steel and alloys
- **Power:** Electric (110 v or 220 v)

Orbital facing machines are advanced and useful equipment used to precisely prepare the ends of tubes and pipes, particularly those with thin walls and small diameters. AXXAIR's DC range ensure that the tube ends are perpendicular to the tube axis, burr free, and have a smooth surface finish, essential for high-quality welding and assembly.

Unlike traditional cutting methods, which can leave irregularities and burrs, orbital facing provides a clean and accurate finish. This process is especially important in industries where precision and reliability are paramount, such as aerospace, automotive, pharmaceutical and semiconductors industries.

FEATURES AND ADVANTAGES

The AXXAIR DC115AM and DC221AM orbital facing models are portable, lightweight machines, ideal for both workshop and in situ applications. They are both available in an electrical (110 / 220v) version.

The stainless steel collets guarantee a perfect clamping on the tube. The set up, locking and machining of the tube is made easy by the large opening pivot, graduated vernier scale for precise advancement and sliding adjustment of the tool holder offering easy diameter change and optimal tip wearing.

Burr-free tube facing, edge breaking and bevelling (30° & 45°) can be done by selecting the required high quality HSS TIALN inserts.

On the DC115AM model, two tools can be used simultaneously. While on the DC221AM, three tools can be used simultaneously to face and bevel the tube in a single operation.

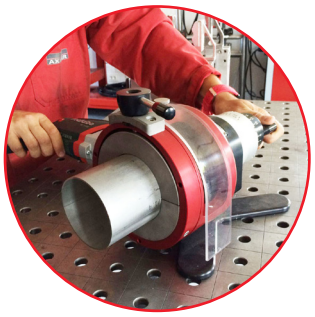
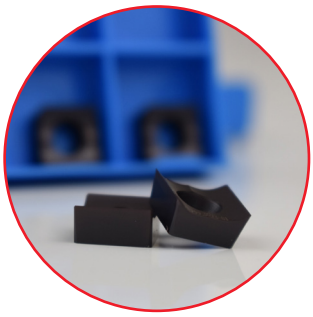

MODELS AND POWER OPTIONS

DC115	DC221
	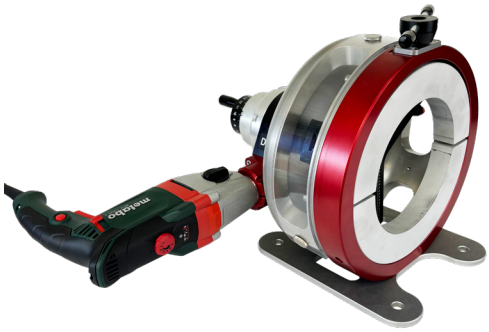
TUBE O/D RANGE: **0.5 - 4.5" / 12 - 115 mm**	**TUBE O/D RANGE:** **2 - 8.5" / 50 - 220 mm**
PART NO. DC115-AM1 (110V) **PART NO. DC115-AM2 (220V)**	**PART NO. DC221-AM1 (110V)** **PART NO. DC221-AM2 (220V)**

Metabo motor 1300W, large speed range (2 gears)**:** screw and wheel drive to optimize the speed range and eliminate vibrations

DC115 / DC221 TECHNICAL FEATURES

DESCRIPTION	MEASUREMENT	DC115	DC221
POWER		ELECTRIC	ELECTRIC
Part No.	n/a	DC115-AM1 / DC115-AM2	DC221-AM1 / DC221-AM2
Diameter range	mm (o/d)	12 - 115	50 - 220
Diameter range	inch (o/d)	0.5 - 4.5	2 - 8.5
Bevelling wall thickness capacity	mm / inch	3.0 / 0.118" max.	3.0 / 0.118" max.
Minimal straight length of tube	mm / inch	28 / 1.102	39 / 1.535
Idle speed	rpm	Speed 1 : 12 - 72 / Speed 2: 34 - 207	Speed 1: 12 - 72 / Speed 2: 34 - 207
Electric motor power	watt	1300	1300
Voltage	volt	110 or 220	110 or 220
Frequency	Hz	50 / 60	50 / 60
Air working pressure	psi / bar	n/a	n/a
Max acoustic radiation	dB	80	80
Vibration level	m/s^2	<2.5	<2.5
Unit weight	kg / lbs	11 / 24.25	21 / 24.25
Machine dimensions	mm	314 x 462 x 219	412 x 525 x 327
Machine dimensions	inch	12.36 x 18.19 x 8.62	16.22 x 20.67 x 12.87
Packing dimensions	mm	260 x 660 x 530	510 x 650 x 370
Packing dimensions	inch	10.24 x 25.98 x 20.87	20.08 x 25.6 x 14.57
Packing weight	kg / lbs	18 / 39.68	34 / 74.96
Our group policy is one of continuous improvement. Products and data tables are subject to change and may vary from those illustrated.			

- Delivered in a shockproof case
- Waterproof and dustproof

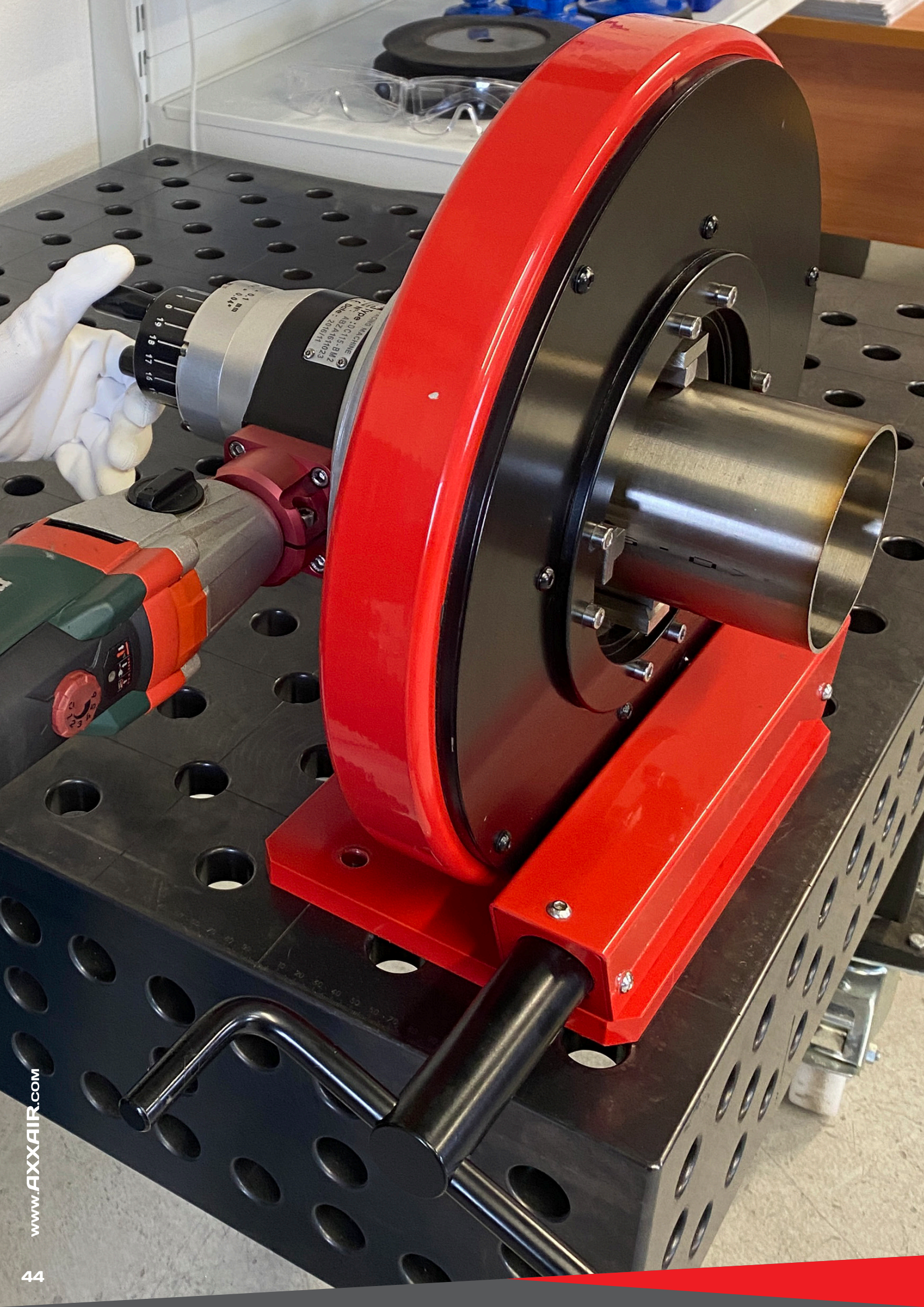

DC RANGE - DC115 / DC221 WITH CONCENTRIC CLAMPING TUBE FACING & SQUARING MACHINES

0.5 - 8.5" o/d / 12 - 220 mm o/d

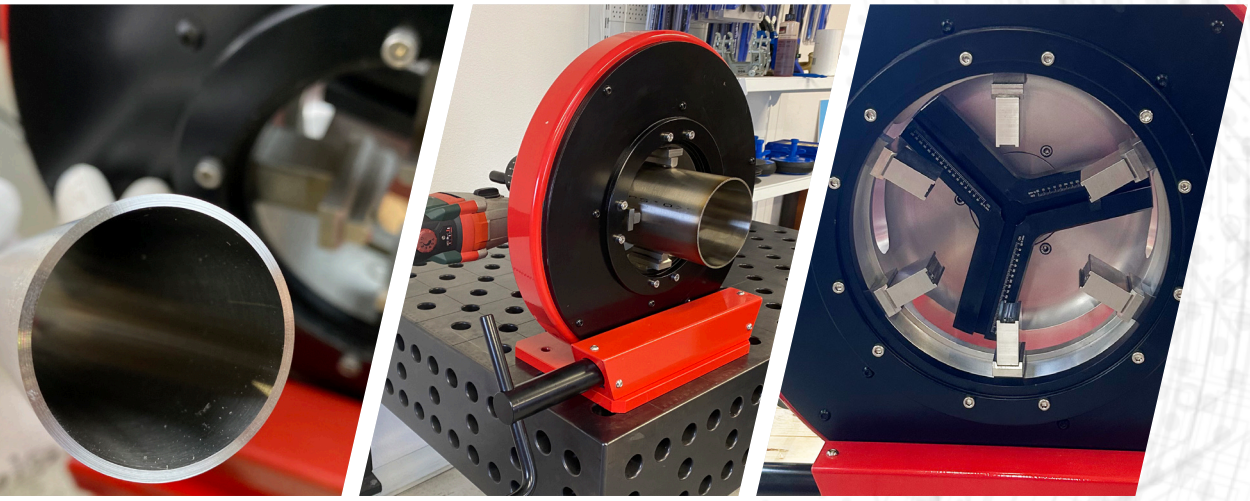

SCAN QR CODE
TO WATCH VIDEO

AXXAIR
AN SPG GROUP BRAND

www.AXXAIR.com

DC115 / DC221 WITH CONCENTRIC CLAMPING TUBE FACING & SQUARING MACHINES

0.5 - 8.5" o/d / 12 - 220 mm o/d

- **Functions:** Tube Facing / Facing in position / Deburring / Bevelling (max thickness 3mm - 0.118")
- **Materials:** All types of steel and alloys
- **Power:** Electric 1300W (110 v or 220 v)

Orbital facing machines are advanced and useful equipment used to precisely prepare the ends of tubes and pipes, particularly those with thin walls and small diameters. AXXAIR's DC range ensure that the tube ends are perpendicular to the tube axis, burr free, and have a smooth surface finish, essential for high-quality welding and assembly.

Unlike traditional cutting methods, which can leave irregularities and burrs, orbital facing provides a clean and accurate finish. This process is especially important in industries where precision and reliability are paramount, such as aerospace, automotive, pharmaceutical and semiconductors industries.

FEATURES AND ADVANTAGES

The DC115BM and DC221BM orbital facing models are portable, lightweight machines, ideal for both workshop and in situ applications. They are both available in an electrical (110 / 220v) version.

The concentric clamping system guarantees at all time a perfect protection of the tube when clamping it. On the DC115BM model a set of 4 stainless steel concentric jaws is used, whereas the DC221BM model is equipped with a set of 6 jaws.

The set up, locking and machining of the tube is made easy by the large opening range, graduated vernier scale for precise advancement and sliding adjustment of the tool holder offering easy diameter change and optimal tip wearing.

Burr-free tube facing, edge breaking and bevelling (30° & 45°) can be done by selecting the required high quality HSS TIALN inserts. On the DC115BM model, two tools can be used simultaneously. While on the DC221BM, three tools can be used simultaneously to face and bevel the tube in a single operation.

Optionally, the DC115BM and DC221BM model can be mounted on an AXXAIR support bench with height adjustable table.

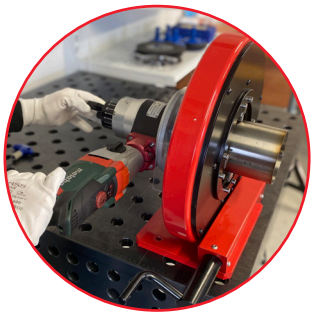
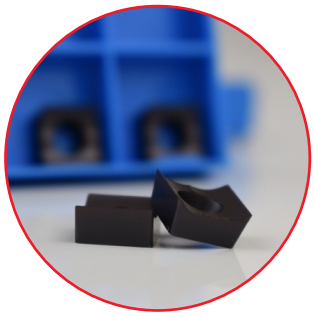

MODELS AND POWER OPTIONS

DC115	DC221
TUBE O/D RANGE: **0.5 - 4.5" / 12 - 115 mm**	**TUBE O/D RANGE:** **2 - 8.5" / 50 - 220 mm**
PART NO. DC115-BM1 (110V) **PART NO. DC115-BM2 (220V)**	**PART NO. DC221-BM1 (110V)** **PART NO. DC221-BM2 (220V)**

Motor 1300W, large speed range (2 gears)**:** screw and wheel drive to optimize the speed range and eliminate vibrations

DC115 / DC221 TECHNICAL FEATURES

DESCRIPTION	MEASUREMENT	DC115	DC221
POWER		ELECTRIC	ELECTRIC
Part No.	n/a	DC115-BM1 / DC115-BM2	DC221-BM1 / DC221-BM2
Diameter range	mm (o/d)	12 - 115	50 - 220
Diameter range	inch (o/d)	0.5 - 4.5	2 - 8.5
Bevelling wall thickness capacity	mm / inch	3.0 / 0.118" max.	3.0 / 0.118" max.
Minimal straight length of tube	mm / inch	58 / 2.283	62 / 2.440
Idle speed	rpm	Speed 1 : 12 - 72 / Speed 2: 34 - 207	Speed 1: 12 - 72 / Speed 2: 34 - 207
Electric motor power	watt	1300	1300
Voltage	volt	110 or 220	110 or 220
Frequency	Hz	50 / 60	50 / 60
Air working pressure	psi / bar	n/a	n/a
Max acoustic radiation	dB	80	80
Vibration level	m/s^2	<2.5	<2.5
Unit weight	kg / lbs	37 / 81.57	55 / 121.25
Machine dimensions	mm	392 x 562 x 405	427.5 x 626 x 503
Machine dimensions	inch	15.43 x 22.13 x 15.94	16.83 x 24.66 x 19.80
Packing dimensions	mm	940 x 530 x 850	940 x 530 x 850
Packing dimensions	inch	37 x 20.87 x 33.46	37 x 20.87 x 33.46
Packing weight	kg / lbs	32 / 70.55	54 / 119
Our group policy is one of continuous improvement. Products and data tables are subject to change and may vary from those illustrated.			

DELIVERED IN A WOODEN BOX

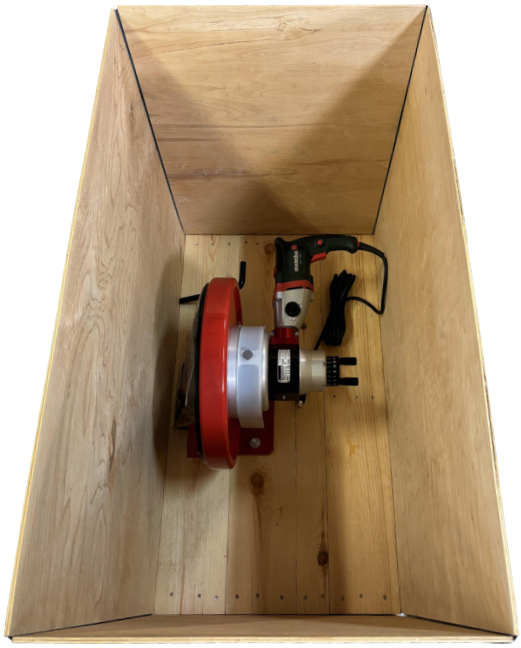

metabo
LTX
AXXAIR

TUBE FACING & SQUARING MACHINES ACCESSORIES & CONSUMABLES

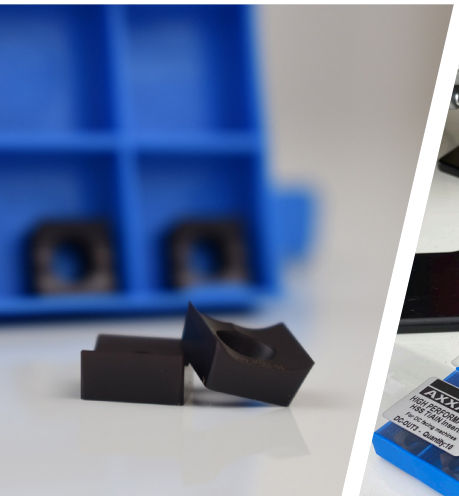

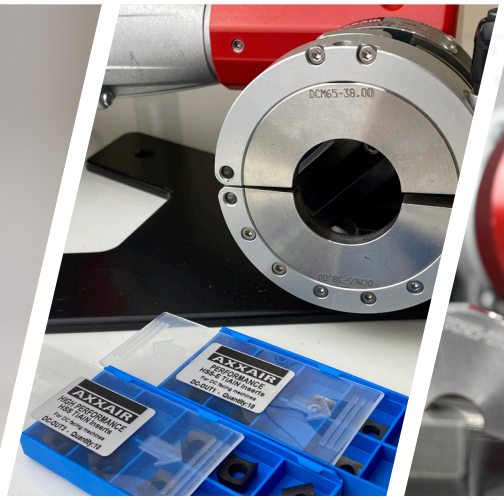

AXXAIR
AN SPG GROUP BRAND

www.AXXAIR.com

TUBE FACING & SQUARING MACHINES - CONSUMABLES

INSERTS

All inserts are double sided with two cutting edges and are HSS TIALN treated, which improves the insert steadiness and heat resistance.

PART NO.	DESCRIPTION	QTY	WEIGHT		PICTURE
DC-OUT1	**Performance inserts** • Double sided HSS TIALN treated inserts • Cutting angle adapted to high speed use or for hard material • Recommended for high productivity applications and hard materials (Inconel, Duplex, Superduplex, etc.)	10	0.028 kg	0.06 lbs	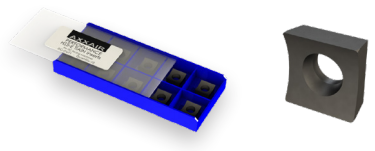
DC-UOUT1		1	2 g	0.07 oz	
DC-OUT3	**High performance inserts** • Double sided HSS TIALN treated inserts • Special design with accurate cutting angle for high-purity burr-free applications • Recommended for high quality burr-free facing applications (pharmaceutical, aeronautic, semiconductor, microfitting, etc.)	10	0.03 kg	0.07 lbs	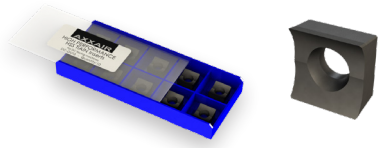
DC-UOUT3		1	3 g	0.11 oz	

TUBE FACING & SQUARING MACHINES - ACCESSORIES

CLAMPING JAWS

For the DC25 / 65 / 115 / 221 models with collets, a set of jaws is required corresponding to the outside diameter of the tube. The correct reference is obtained by combining the DC model type and the required outside diameter in mm (**XX**), e.g. DC25-12.70: collets to face 12.7 mm tube (1/2") with a DC25 facing tool.

FOR MACHINE	PART NO.	TYPE OF JAWS	DIAMETER OF THE BLADE (MM / INCH)		PICTURE
DC25	DCM25-**XX**	Stainless steel jaws	3 - 25.4	0.125 - 1	
DC65	DCM65-**XX**	Stainless steel jaws	3 - 63.5	0.125 - 3.5	
DC115	DCM115-**XX**	Stainless steel jaws	12 - 115	0.5 - 4.5	
DC221	DCM221-**XX**	Aluminum jaws	50 - 220	2 - 8.5	

MICRO FITTING JAWS – ONLY FOR DC25 MODEL

Stainless steel microfitting jaws for DC25 model only. Straight length minimal: 4.3 mm

PART NO.	DIAMETER OF THE TUBE		PICTURE
DCM25-MF03.18	3.18 mm	0.125"	
DCM25-MF06.00	6 mm	0.236"	
DCM25-MF06.35	6.35 mm	0.25"	
DCM25-MF08.00	8 mm	0.315"	
DCM25-MF10.00	10mm	0.394"	
DCM25-MF12.00	12 mm	0.472"	
DCM25-MF12.70	12.7 mm	0.5"	

SPACERS - ONLY FOR DC65 MODEL

Spacers for fitting DC25 jaws on a DC65 model.

PART NO.	DESCRIPTION	WEIGHT		PICTURE
DCM6525	Spacer for DC65	0.022 kg	0.05 lbs	

TOOL HOLDERS

PART NO.	DESCRIPTION	DIMENSIONS		WEIGHT		PICTURE
DC65-P300	Tool holder for bevelling (angle at 30°)	0.87 x 0.51 x 1.12"	22 x 13 x 28.5 mm	0.028 kg	0.061 lbs	Corner at 30°
DC65-P450	Tool holder for bevelling (angle at 45°)	0.87 x 0.51 x 1.12"	22 x 13 x 28.5 mm	0.026 kg	0.057 lbs	Corner at 45°

Tool holder for edge bevelling the corner at 30° or 45°:

- Supplied without inserts
- Bevelling is possible on all models except DC25 machine
- Possibility to simultaneously face and bevel the tube on all models except DC25 machine (Note: DC65 model has a reduced range 0.78 - 2.08" / 20 - 53 mm)

ONLY FOR MODELS DC115 / DC221 with concentric clamping

SUPPORT BENCH - WITH HEIGHT ADJUSTMENT

PART NO.	DESCRIPTION	DIMENSIONS		WEIGHT		PICTURE
CCBSB-X1	Support bench with height adjustment	72 x 37 x 20"	1,840 x 950 x 510 mm	57 kg	126 lbs	

- Stainless steel rollers
- Height adjustment crank
- Length: 1,500 mm / 59"
- Maximum load capacity: 350 kg / 772 lbs
- Diameter min. tube: 5 mm (0,196") / diameter max. tube: 54 mm (2.12") with DC115, 150 mm (50.90") with DC221

SUPPORT BENCH - ADDITIONAL SUPPORT BENCH

PART NO.	DESCRIPTION	DIMENSIONS		WEIGHT		PICTURE
CCBSB-X2	Additional support bench	59 x 37 x 20"	1,500 x 950 x 510 mm	38 kg	84 lbs	

- Stainless steel rollers
- Length: 1,500 mm / 59"
- Maximum load capacity: 350 kg / 772 lbs
- Diameter min. tube: 5 mm (0,196") / diameter max. tube: 54 mm (2.12") with DC115, 150 mm (50.90") with DC221

ORBITAL WELDING SOLUTIONS

AXXAIR
AN SPG GROUP BRAND

www.AXXAIR.com

AXXAIR

ORBITAL WELDING SOLUTIONS

PREFABRICATION: SX-RANGE FUSION / FUSION + WIRE

0.5 - 12.750" o/d / 12 - 328 mm o/d

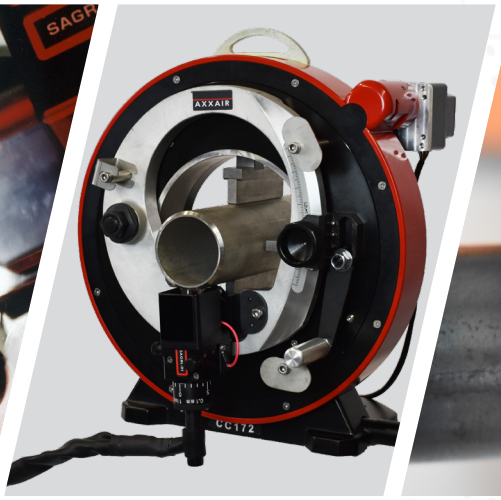

AXXAIR
AN SPG GROUP BRAND

www.AXXAIR.com

PREFABRICATION ORBITAL WELDING
SX-RANGE FUSION / FUSION + WIRE

0.5 - 12.750" o/d / 12 - 328 mm o/d

Combine with Pipe Purge Masters (PPM) solutions

- **Functions:** Orbital TIG welding by fusion or fusion + wire. The welding application can be converted in to a cutting or bevelling mode (ref. CC-Range Orbital Cutting machines and GA-Range Orbital Bevelling machines).
- **Materials:** Any kind of steel and exotic alloys
- **Powered by the SAXX power source range**

The **prefabrication orbital welding machine** is an automated system created for assembling tube components in a controlled environment before on-site installation. This machine improves the welding process by accurately and consistently joining tube components. **It is powered by the SAXX power source and ensures uniform and reliable welds.**

The prefabrication approach enables precise construction in a workshop, reducing on-site work and minimizing errors during installation. This innovative technology enhances efficiency, maintains high-quality welds, and is crucial in industries where precision and standardized fabrication are essential.

MAIN FEATURES

Water cooled

Air cooled

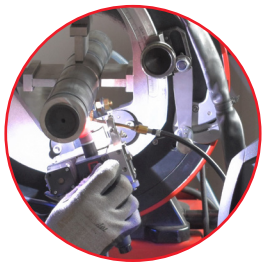

CONCENTRIC CLAMPING
less possibility of tube distortion

AUTOMATIC ROTATION
Connected to the SAXX welding power supplies

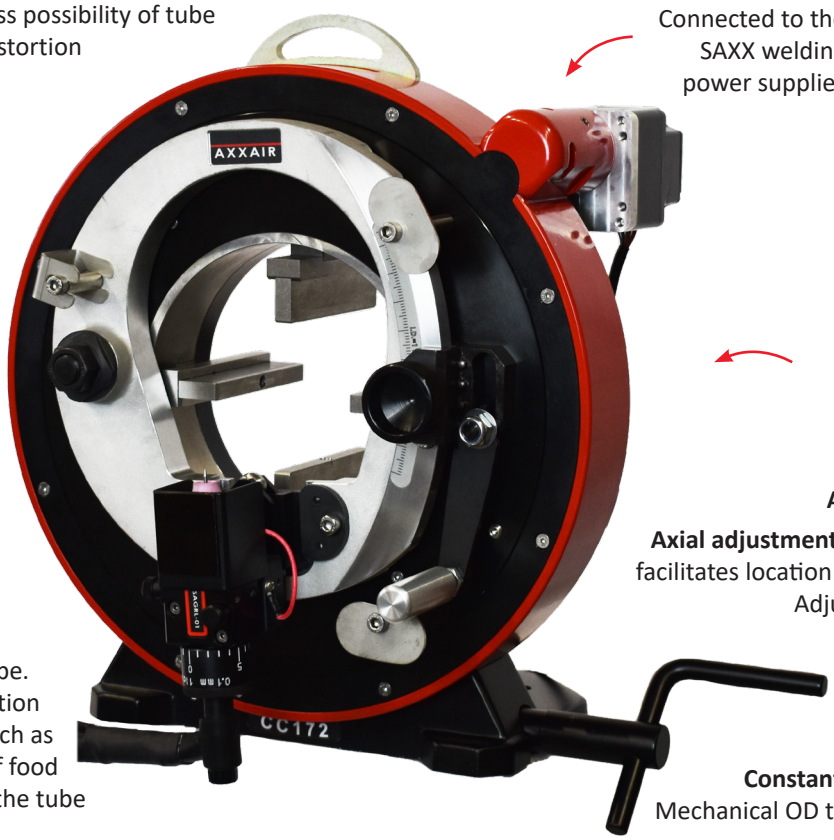

ACCURATE POSITIONING

Axial adjustment of the electrode position: facilitates location of the parts to be welded. Adjustment of the tube's axial position +/- 5 mm (0.2")

Micrometric adjustment of the arc gap without specific tooling

Constant distance electrode-tube: Mechanical OD tracking of tube ovalization

STAINLESS STEEL JAWS
no contamination of the tube. Guarantee a perfect protection towards external attacks such as corrosion, the protection of food or any liquid routed inside the tube

1 MACHINE - 3 APPLICATIONS

CUTTING - BEVELLING - WELDING
Move from one to another with only 2 setting screws

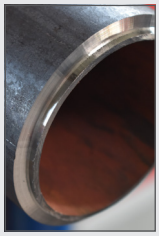

MODELS

SX122	SX172	SX222	SX322
TUBE O/D RANGE: 0.5 - 4.5" / 12 - 119 mm	TUBE O/D RANGE: 0.625 - 6.625" / 16 - 173 mm	TUBE O/D RANGE: 2.375 - 8.625" / 55 - 228 mm	TUBE O/D RANGE: 5.563 - 12.750" / 141 - 328 mm
PART NO. SX122-A (AIR) PART NO. SX122-E (WATER)	PART NO. SX172-A (AIR) PART NO. SX172-E (WATER)	PART NO. SX222-A (AIR) PART NO. SX222-E (WATER)	PART NO. SX322-A (AIR) PART NO. SX322-E (WATER)

POWER SOURCE

SAXX-201	SAXX-200	SAXX-210	SAXX-300
Orbital TIG welding power source 200A, 110 - 220v *with or without cooling system*	Orbital TIG welding power source 200A, 110 - 220v *with or without cooling system*	Orbital TIG welding power source 210A, 110 - 220v	Orbital TIG welding power source 300A, 400v

DIMENSIONS

DIM	SX122-A/E		SX172A/E		SX172A/E		SX322A/E	
A	17.56"	446 mm	19.41"	493 mm	21.57"	548 mm	25.55"	649 mm
B	21.30"	541 mm	22.28"	566 mm	23.38"	594mm	25.35"	644 mm
C	13.78"	350 mm	13.78"	350 mm	13.78"	350 mm	13.78"	350 mm

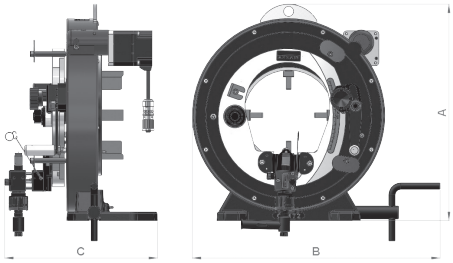

TECHNICAL FEATURES

DESCRIPTION	MEAS.	SX122		SX172		SX222		SX322	
POWER	-	AIR COOLED	WATER COOLED	AIR COOLED	WATER COOLED	AIR COOLED	WATER COOLED	AIR COOLED	WATER COOLED
Part No	-	SX122-A	SX122-E	SX172-A	SX172-E	SX222-A	SX222-E	SX322-A	SX322-E
Locking tube range	mm (o/d)	12 - 119		16 - 173		55 - 228		141 - 328	
	inch (o/d)	0.25 - 4.5		0.625 - 6.625		2.375 - 8.625		5.563 - 12.750	
100% duty cycle	A	100	200	100	200	100	200	100	200
Diam electrode	mm	1.6 or 2.4		1.6 or 2.4		1.6 or 2.4		1.6 or 2.4	
	inch	1/16 or 3/32		1/16 or 3/32		1/16 or 3/32		1/16 or 3/32	
Cooling system	-	No	Yes	No	Yes	No	Yes	No	Yes
Max operating temperature	°C	40		40		40		40	
	F	104		104		104		104	
Max acoustic radiation	dB	<70		<70		<70		<70	
Unit weight	kg	45	45	52	52	59	59	73	73
	lbs	99	99	115	115	130	130	161	161

ELECTRODES

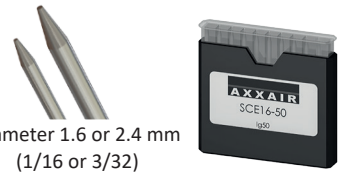

Diameter 1.6 or 2.4 mm
(1/16 or 3/32)

PART NO. SCE16-50 / SCE24-50

SPARE PARTS KITS

PART NO. SKTD-01/02

DELIVERY AND STORAGE

Each machine is supplied in a wooden box

TRIPOD STAND

PART NO. CCPS21

SUPPORT BENCHES

CCBSB-X1 CCBSB-X2

PART NO. CCBSB-X1
PART NO. CCBSB-X2

SUPPORT BENCHES
WITH END STOP SYSTEM

PART NO. CCBSB-XX-X-XX **

WIRE FEEDER

PART NO. SADF2X

WIRE GUIDE

PART NO. SADFP-02

INCLINED TORCH KITS

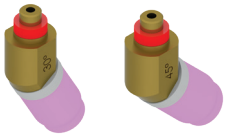

30° or 45°

PART NO. SKTDI-30 / SKTDI- 45

PURGE KITS

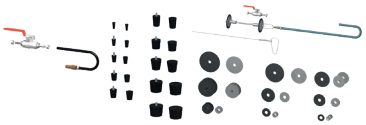

PART NO. SKIB-01/SKIF-01

AUTOMATIC ROTATION & CLAMPING SYSTEM

PART NO. XXX-AU *

CONVERSION KITS

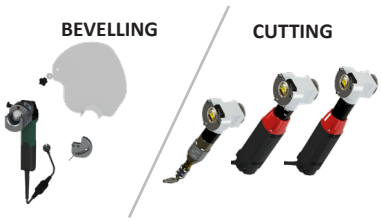

PART NO. GA10-M1-XXX / FSXXX **
PART NO. GA10-M2-XXX / FSXXX **

* XXX = MODEL NO. 122 / 172 / 222 / 322
** REFER TO: ORBITAL CUTTING & BEVELLING MACHINES ACCESSORIES & CONSUMABLES

ORBITAL WELDING SOLUTIONS

PREFABRICATION: SX-RANGE WITH AVC / OSC SYSTEM

0.5 - 12.750" o/d / 12 - 328 mm o/d

SCAN QR CODE
TO WATCH VIDEO

AXXAIR
AN SPG GROUP BRAND

www.AXXAIR.com

PREFABRICATION ORBITAL WELDING
SX-RANGE WITH AVC / OSC SYSTEM

Combine with Pipe Purge Masters (PPM) solutions

0.5 - 12.750" o/d / 12 - 328 mm o/d

- **Functions:** Orbital TIG welding with AVC / OSC (Arc Voltage Control / Oscillation). The welding application can be converted into a cutting or bevelling mode (ref. CC-Range Orbital Cutting machines and GA-Range Orbital Bevelling machines).
- **Materials:** Any kind of steel and exotic alloys
- **Powered by the SAXX power source range**

The **prefabrication orbital welding machine** is an automated system created for assembling tube components in a controlled environment before on-site installation. This machine improves the welding process by accurately and consistently joining tube components. **It is powered by the SAXX power source and ensures uniform and reliable welds.**

The prefabrication approach enables precise construction in a workshop, reducing on-site work and minimizing errors during installation. This innovative technology enhances efficiency, maintains high-quality welds, and is crucial in industries where precision and standardized fabrication are essential.

MAIN FEATURES

Water cooled

- **Prefab orbital welding machine with AVC/OSC system :** allows to weld tubes with up to 12.7 mm wall thickness (0.5")
- Oscillation range: 20 mm (0.79"), AVC range: 20 mm (0.79"), max speed: 15 mm/s (0.59"/s)

AUTOMATIC ROTATION
Connected to the SAXX welding power supplies

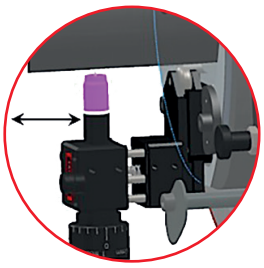

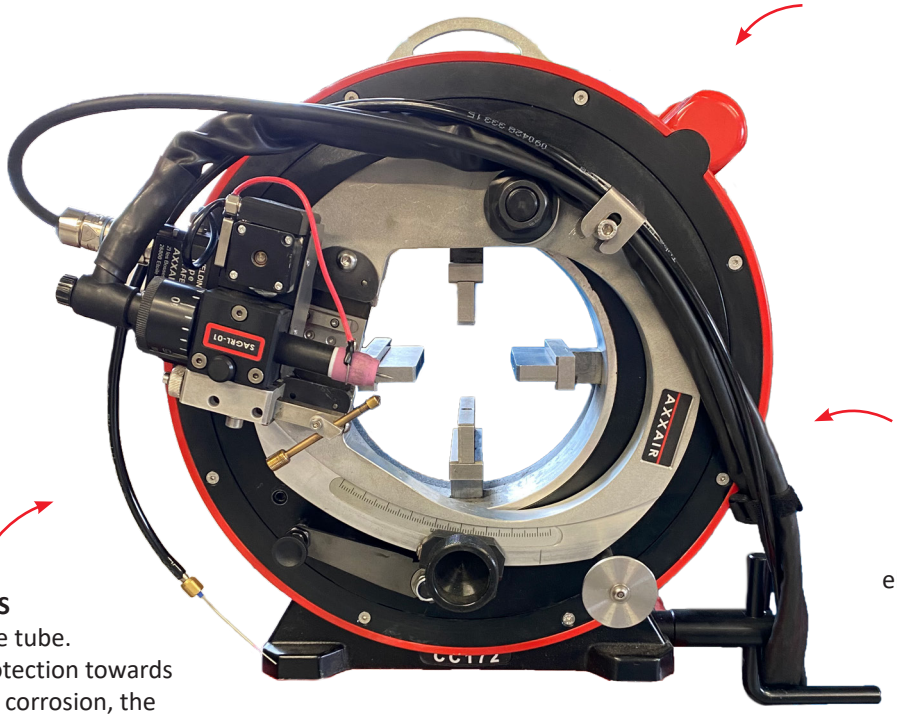

CONCENTRIC CLAMPING
Less possibility of tube distortion

MULTI-PASS WELDING
Motorized axial sweep (OSC) Movement of the electrode's axial position: +/- 10 mm (0.39")

STAINLESS STEEL JAWS
No contamination of the tube. Guarantee a perfect protection towards external attacks such as corrosion, the protection of food or any liquid routed inside the tube

CONSTANT DISTANCE ELECTRODE - TUBE
motorized setting and control of the distance tube-electrode (AVC) regulates the arc voltage, the distance between the electrode and the tube

1 MACHINE - 3 APPLICATIONS

CUTTING - BEVELLING - WELDING
Move from one to another with only 2 setting screws

WHAT IS AVC/OSC?

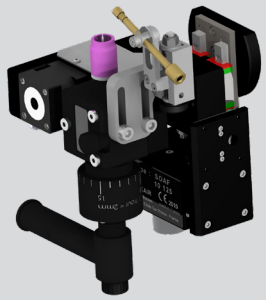

MOTORISED ARC VOLTAGE CONTROL: AVC

The motorized arc voltage control, commonly known as AVC (Arc Voltage Control), relates to the distance between the tube and the electrode. This option ensures a consistant tube-electrode distance by adjusting automatically the tension of the arc during welding. AVC is an important feature, particularly for multipass orbital TIG welding processes as it provides more precision and consistency allowing better quality welds.

The two most common applications:

- When you do not want to mechanically gauge the outer diameter, AVC requires no contact with the tube, and the sensor is more precise and responsive than mechanical tracking.
- When welding with filler wire and the deposition rate under the electrode is not perfectly controlled, which of course affects the arc height. In this case, AVC ensures that the weld pool is never touched.

ORBITAL TIG WELDING WITH AVC + OSC + WIRE:

Mechanized multipass pipe welding combines automatic Arc Voltage Control, oscillation of the torch and adding filler material. It is used when welding thicker wall pipe which requires several passes to fill a bevelled joint with wire. It usually consists in a root pass, one or several filling passes depending on the thickness and the preparation, and a cap pass. While filling out the joint with wire, the torch oscillates sweeping the electrode within the joint from left to right while also moving around the pipe at a constant travel speed. A constant oscillation allows a more efficient wire deposition and more consistent fusion of the material on each side of the joint.

An orbital TIG welding system with AVC + OSC + wire is the most effective and efficient solution to fill a J-prep configuration in multipass TIG welding.

MODELS

SX122 AVC/OSC	SX172 AVC/OSC	SX222 AVC/OSC	SX322 AVC/OSC
TUBE O/D RANGE: 0.5 - 4.5" / 12 - 119 mm	TUBE O/D RANGE: 0.625 - 6.625" / 16 - 173 mm	TUBE O/D RANGE: 2.375 - 8.625" / 55 - 228 mm	TUBE O/D RANGE: 5.563 - 12.750" / 141 - 328 mm
PART NO. SX122-NAOF	PART NO. SX172-NAOF	PART NO. SX222-NAOF	PART NO. SX322-NAOF

POWER SOURCE

SAXX-210 AVC/OSC	SAXX-300 AVC/OSC
Orbital TIG welding power source 210A, 110 - 220v	Orbital TIG welding power source 300A, 400v

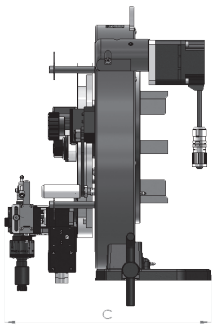

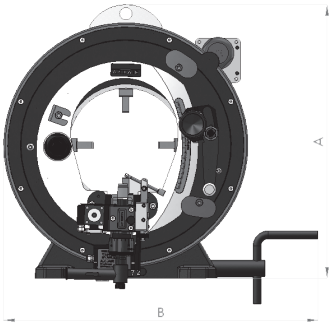

DIMENSIONS

DIM	SX122-NAOF		SX172-NAOF		SX122-NAOF		SX172-NAOF	
H	17.56"	446 mm	19.41"	493 mm	21.57"	548 mm	25.55"	649 mm
L	21.30"	541 mm	22.28"	566 mm	23.38"	594mm	25.35"	644 mm
I	346 => 371 mm 13.62" => 14.60"		346 => 371 mm 13.62" => 14.60"		346 => 371 mm 13.62" => 14.60"		346 => 371 mm 13.62" => 14.60"	

TECHNICAL FEATURES

	MEAS.	SX122	SX172	SX222	SX322
		AVC/OSC SYSTEM	AVC/OSC SYSTEM	AVC/OSC SYSTEM	AVC/OSC SYSTEM
PART NO.	-	SX122-NAOF	SX172-NAOF	SX222-NAOF	SX322-NAOF
DIAMETER RANGE	mm (o/d)	12 - 119	16 - 173	55- 228	141 - 328
	inch (o/d)	0.5 - 4.5	0.625 - 6.625	2.375 - 8.625	5.563 - 12.750
100% DUTY CYCLE	A	200	200	200	200
DIAMETER ELECTRODE	mm	1.6 or 2.4	1.6 or 2.4	1.6 or 2.4	1.6 or 2.4
	inch	1/16 or 3/32"	1/16 or 3/32"	1/16 or 3/32"	1/16 or 3/32"
COOLING SYSTEM	-	Yes	Yes	Yes	Yes
MAX. OPERATING TEMPERATURE	°C	40	40	40	40
	F	104	104	104	104
MAX. ACOUSTIC RADIATION	dB	<70	<70	<70	<70
UNIT WEIGHT	kg	46	53	61	74
	lbs	101	117	134	163

CONSUMABLES & ACCESSORIES

ELECTRODES

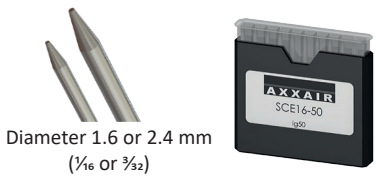

Diameter 1.6 or 2.4 mm
(1/16 or 3/32)

PART NO. SCE16-50 / SCE24-50

SPARE PARTS KITS

PART NO. SKTD-01/02

DELIVERY AND STORAGE

Each machine is supplied in a wooden box

TRIPOD STAND

PART NO. CCPS21

SUPPORT BENCHES

CCBSB-X1 CCBSB-X2

PART NO. CCBSB-X1
PART NO. CCBSB-X2

SUPPORT BENCHES WITH END STOP SYSTEM

PART NO. CCBSB-XX-X-XX **

WIRE FEEDER

PART NO. SADF2X

PURGE KITS

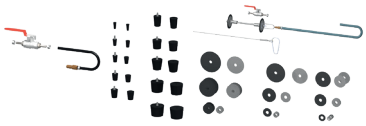

PART NO. SKIB-01/SKIF-01

CONVERSION KITS

BEVELLING CUTTING

PART NO. GA10-M1-XXX / FSXXX **
PART NO. GA10-M2-XXX / FSXXX **

* XXX = MODEL NO. 122 / 172 / 222 / 322
** REFER TO: ORBITAL CUTTING & BEVELLING MACHINES ACCESSORIES & CONSUMABLES

ORBITAL WELDING SOLUTIONS

Accessories & consumables for SX

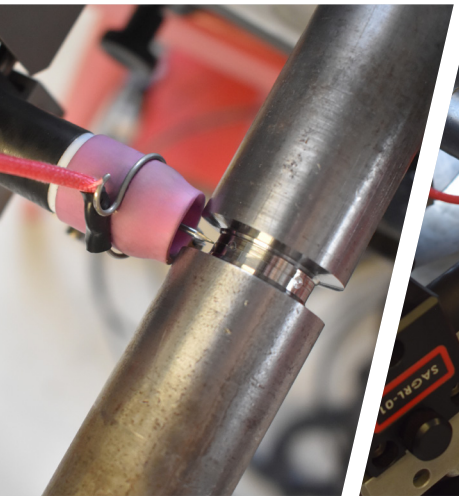

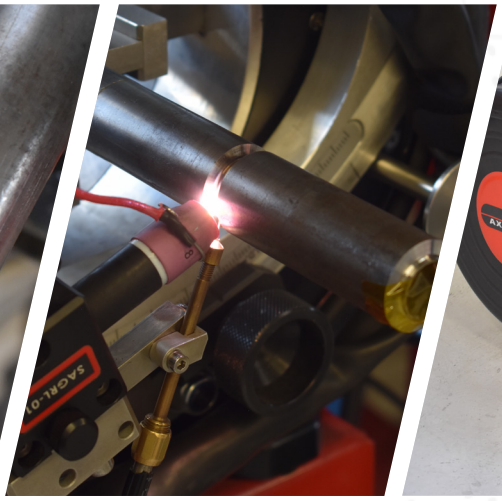

AXXAIR
AN SPG GROUP BRAND

PREFAB ORBITAL WELDING MACHINES - CONSUMABLES

ELECTRODES

- Tungsten electrodes
- AXXAIR's electrodes are specifically sharpened at 20° with a flat tip.

PART NO.	DIAMETER ELECTRODES	DESCRIPTION	WEIGHT		DIMENSIONS	
SCE16-50	1.6 mm 1/16"	Box of 10 tungsten electrodes, diameter 1.6 mm (1/16"), length 50 mm	0.02 kg	0.044 lbs	6 x 5 x 1 cm	2 x 1.6 x 0.4"
SCE24-50	2.4 mm 3/32"	Box of 10 tungsten electrodes diameter 2.4 mm (3/32"), length 50 mm	0.05 kg	0.11 lbs	6 x 5 x 1 cm	2 x 1.6 x 0.4"

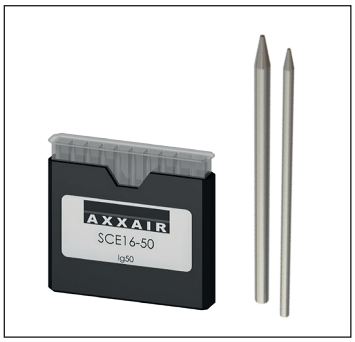

STRAIGHT TORCH SPARE PARTS KIT

Consisting of: 5 nozzles, 2 plugs 9/20, 2 long electrode clamps,
10 electrodes (diameter 1.6 mm **or** 2.4 mm) and 2 mesh diffusers

PART NO.	DIAMETER ELECTRODES	DESCRIPTION	WEIGHT		DIMENSIONS (PLASTIC BOX)	
SKTD-01	1.6 mm / 1/16"	Spare parts kit for straight torch diameter 1.6 mm (1/16")	0.3 kg	0.66 lbs	12 x 17.5 x 4 cm	4.7 x 7 x 1.6"
SKTD-02	2.4 mm / 3/32"	Spare part kit for straight torch diameter 2.4 mm (3/32")	0.3 kg	0.66 lbs	12 x 17.5 x 4 cm	4.7 x 7 x 1.6"

PREFAB ORBITAL WELDING MACHINES - ACCESSORIES

TRIPOD STAND

- Level adjustment
- Possibility to secure it to the ground
- Storage bin for tools and consumables
- Quick assembly and disassembly

PART NO.	DESCRIPTION	WEIGHT		DIMENSIONS	
CCPS21	Tripod stand	10 kg	22 lbs	103 x 32 x 11 cm	40.6 x 12.6 x 4.3"

SUPPORT BENCH - WITH HEIGHT ADJUSTMENT

- Stainless steel rollers
- Height adjustment crank
- 150 cm / 59.05" length
- Maximum load capacity: 350 kg / 771.61 lbs
- Diameter minimum pipe: 5 mm (0.196") / diameter maximum pipe: 321 mm (12.637")

PART NO.	DESCRIPTION	WEIGHT		DIMENSIONS	
CCBSB-X1	Bench with height adjustment	57 kg	126 lbs	184 x 95 x 51 cm	72 x 37 x 20"

B&B Pipe & Industrial Tools™ AN GGG GROUP BRAND

Please refer to the B&B Pipe and Industrial Tools brochure for more pipe stand solutions.
www.BBPIPETOOLS.com

SUPPORT BENCH - ADDITIONAL SUPPORT BENCH

- Stainless steel rollers
- 150 cm / 59.05" length
- Maximum load capacity: 350 kg / 772 lbs
- Diameter minimum pipe: 5 mm (0.196") / diameter maximum pipe: 321 mm (12.637")

PART NO.	DESCRIPTION	WEIGHT		DIMENSIONS	
CCBSB-X2	Additionnal support bench	38 kg	84 lbs	150 x 95 x 51 cm	59 x 37 x 20"

BENCH CONNECTION KIT

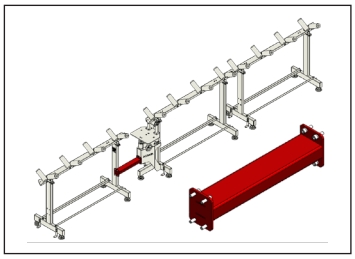

Allows to connect an additional bench in front of the height-adjustable table (load out)

PART NO.	DESCRIPTION	WEIGHT		DIMENSIONS	
CCBSB-B005	Connection kit for bench CCBSB-X1+X2	3 kg	7 lbs	10 x 8 x 40.2 cm	4 x 3 x 16"

SAXX WIRE FEEDER

- Cable length 5 m max (16ft)
- Supplied with SAXX power source-connection cable and teflon sheath to guide the wire
- Drive pressure adjusted by adjustable spring, with handle

PART NO.	DESCRIPTION	WEIGHT		DIMENSIONS	
SADF2X	External wire feeder for SAXX	12 kg	26 lbs	60 x 38 x 24 cm	24 x 15 x 9"

ACCESSORIES ONLY FOR SX MACHINES WITH WIRE - WATER OR AIR COOLING

WIRE GUIDE (FOR SX-XX2-A AND SX-XX2-E)

PART NO.	DESCRIPTION	NET WEIGHT		PACKAGING DIMENSIONS		PICTURE
SADFP-02	Wire guide for SP and SX	0.05 kg	0.11 lbs	51 x 90 x 65 mm	2 x 3.5 x 2.6"	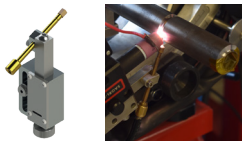

INCLINED TORCH KITS (FOR SX-XX2-A AND SX-XX2-E)

PART NO.	DESCRIPTION	WEIGHT		DIMENSIONS		PICTURE
SKTDI-30	Inclined torch kit 30°	0.3 kg	0.66 lbs	12 x 17.5 x 4 cm	5 x 7 x 1.6"	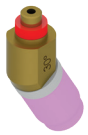
SKTDI-45	Inclined torch kit 45°	0.3 kg	0.66 lbs	12 x 17.5 x 4 cm	5 x 7 x 1.6"	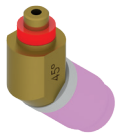

GAS PLUG PURGING KIT

Facilitates and accelerates inerting. Avoids the use of adhesive paper.

Consisting of: 10 sets of perforated plugs, 1 gas inlet connector,
1 hose Ø ⅝ length 5 metres, 1¼ turn gas valve

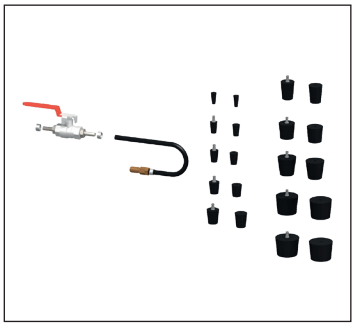

PART NO.	DESCRIPTION	WEIGHT		PACKAGING DIMENSIONS	
SKIB-01	Gas plug purging kit for tubes or Ø 6 to 41 mm	1.7 kg	3.75 lbs	35 x 30 x 9.5 cm	13.8 x 11.8 x 3.7"

GAS MEMBRANE PURGING KIT

Inerting tubes in the area to be welded before and during welding minimises gas consumption.

Consisting of: 9 sets of membranes with washers, 1 gas hose 6 m,
1 metal cable, 1¼ turn gas valve, 1 carabiner

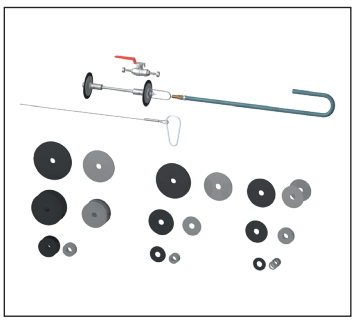

PART NO.	DESCRIPTION	WEIGHT		PACKAGING DIMENSIONS	
SKIF-01	Gas membrane purging kit for tubes Ø 40 to 120 mm	4.5 kg	9.92 lbs	35 x 30 x 9.5 cm	13.8 x 11.8 x 3.4"

PPM PIPE PURGE MASTERS AN AXXAIR GROUP BRAND

Please refer to the Pipe Purge Masters (PPM) brochure for more purging solutions.
www.PURGEMASTERS.com

GLOBAL PROCESS: 1 MACHINE – 3 APPLICATIONS

The orbital welding prefab machines SX 122 - 172 - 222 - 322 can be converted into a bevelling or a cutting machine thanks to the conversion kits below.

BEVELLING CONVERSION KIT

Consisting of: Kit includes: motor, chip shield, workpiece guide tailored to the frame

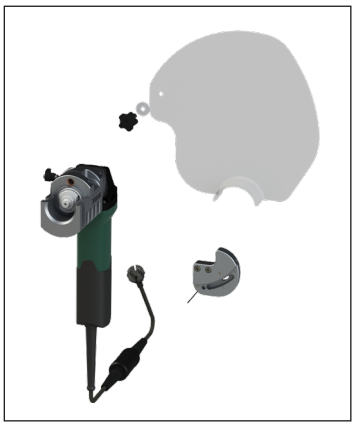

PART NO.	DESCRIPTION	WEIGHT	
GA10-M1-122 / GA10-M2-122	Beveling motor kit 120V / 230V for body 122	5 kg	11 lbs
GA10-M1-172 / GA10-M2-172	Beveling motor kit 120V / 230V for body 172	5 kg	11 lbs
GA10-M1-222 / GA10-M2-222	Beveling motor kit 120V / 230V for body 222	5 kg	11 lbs
GA10-M1-322 / GA10-M2-322	Beveling motor kit 120V / 230V for body 322	5 kg	11 lbs

CUTTING CONVERSION KIT (MOTORS)

PART NO.	DESCRIPTION	WEIGHT	
FS15 / FS25	Double shafted standard motor (elbow cutting) 120V / 230V	5 kg	11 lbs
FS19 / FS29	Double shafted high speed motor (elbow cutting) 120V / 230V	5 kg	11 lbs
MOPD	Double shafted pneumatic motor (elbow cutting)	5 kg	11 lbs

Note: when converting to different applications it is required to select the suitable cutting blades for the selected tube thickness and, if necessary, lubricant. All information and relevant product codes appear in the orbital cutting accessories and consumables section of this brochure.

ORBITAL WELDING SOLUTIONS

MICROFIT CLOSED WELD HEAD X-500

0.118 - 0.5" o/d / 3 - 12.7 mm o/d

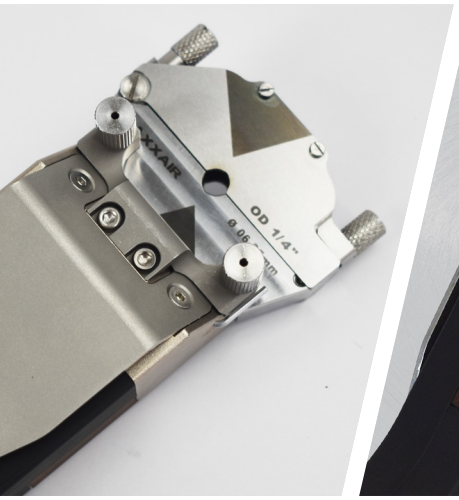

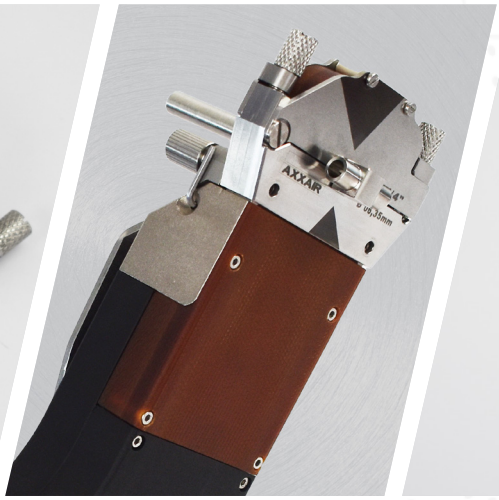

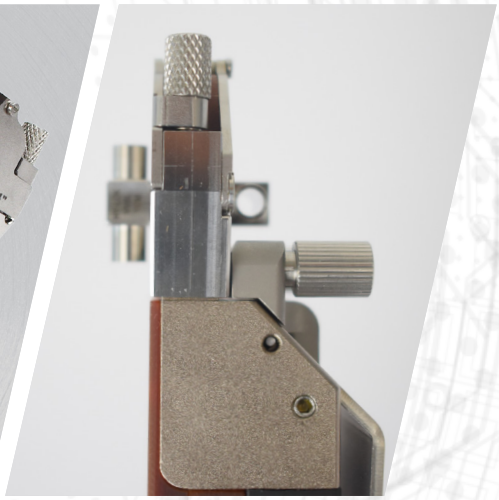

SCAN QR CODE
TO WATCH VIDEO

AXXAIR
AN SPG GROUP BRAND

www.AXXAIR.com

ORBITAL WELDING
MICROFIT CLOSED WELD HEAD X-500

0.118 - 0.5" o/d / 3 - 12.7 mm o/d

Combine with Pipe Purge Masters (PPM) solutions

- **Functions:** Orbital TIG
- **Materials:** Any kind of stainless steel and exotic alloys
- **Powered by the SAXX power source range**
  (available in AMI compatible version with automatic calibration)

X-500 with cassette

The extremely thin design of the X-500 weld head, the thinnest of all AXXAIR closed heads, is ideal for welding micro-fittings and tubes in tight spaces while ensuring precision and reliability in every weld, ideal for the semiconductor, aerospace and pharmaceutical industry.

The X-500 covers the size range of 0.118 - 0.5" / 3 - 12.7 mm o/d using diameter specific clamping cassettes. Air-cooled and water-cooled versions are available.

MAIN FEATURES

- **High level of performance:** up to 20 welds per hour for the air-cooled version and up to 30 welds per hour for the water-cooled version
- **Greaseless operation:** compatible with international cleanroom application and operational standards
- **Optimized gas diffusion:** welds with very limited coloration
- **Integrated remote control:** start/stop, gas and electrode rotation
- **Easy maintenance and cleaning of the rotor:** with an integrated tool in the machine body
- **Compact and light:** 12.3 lbs / 5.6 kg with 8 meters cable (26 ft)

Water cooled

Air cooled

QUICK SET UP OF THE CASSETTE

Thanks to the quick-fit cassette mounting system delivered with the machine

HOOK

Allows to hang the machine on different supports

SINGLE INTEGRATED TOOL

For disassembling the machine to clean the rotor, adjust/change the electrode

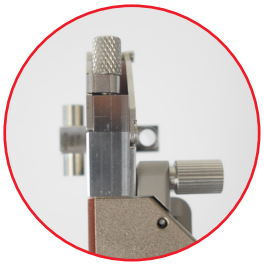

NARROW DESIGN

To weld microfittings or tubes with a straigth lenght as short as 6.35 mm / 0.25"

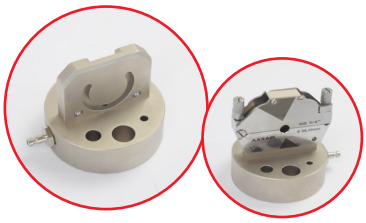

CASSETTE HOLDER (INCLUDED WITH THE MACHINE)

Allows the cassette to be cooled and to center the first piece for the next weld

Cassettes are not included: to be ordered separately according to the tube diameter

POWER SOURCE*

SAXX-201	SAXX-200	SAXX-210	SAXX-300
Orbital TIG welding power source 200A, 110 - 220v *with or without cooling system*	**Orbital TIG welding power source 200A, 110 - 220v** *with or without cooling system*	**Orbital TIG welding power source 210A, 110 - 220v**	**Orbital TIG welding power source 300A, 400v**

** An X-500 multi brand compatible version (AMI and Magnatech) is also available—see the "Multi brand compatible orbital welding solutions" section in the brochure.*

DIMENSIONS (MM/INCH)

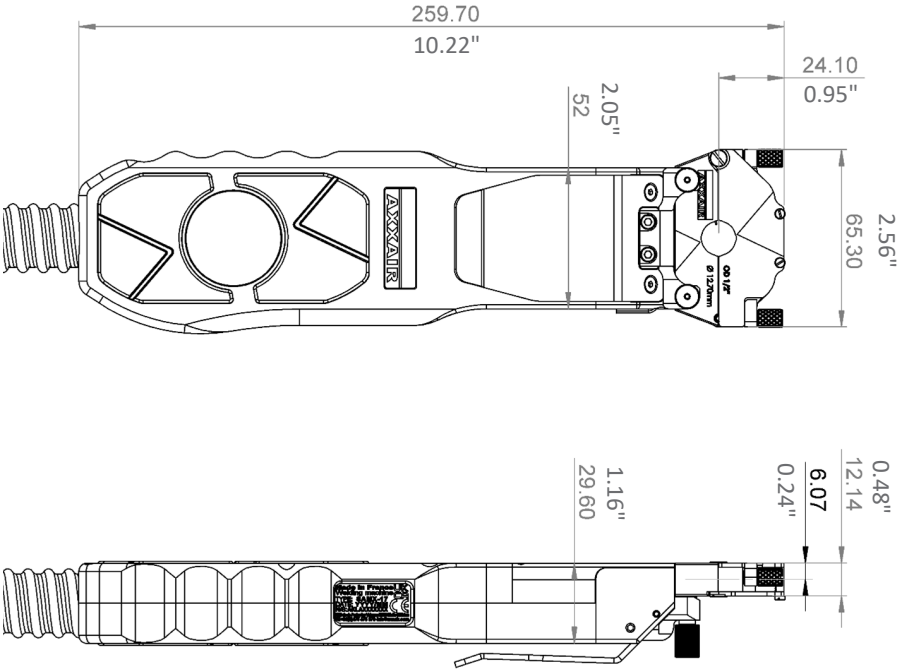

DELIVERY AND STORAGE

Delivered in a shockproof case
with a hook lead

TECHNICAL FEATURES

PART NO.	X-500A	X-500E
DESCRIPTION	Microfit closed weld head with 8 m (26 ft) cable **Air cooled**	Microfit closed weld head with 8 m (26 ft) cable **Water cooled**
TUBE DIAMETER (O/D)	3 - 12.7 mm	3 - 12.7 mm
	0.118 - 0.5"	0.118 - 0.5"
ELECTRODE DIAMETER	1.0 mm	1.0 mm
	0.040"	0.040"
WEIGHT WITH CABLE	12.3 lbs / 5.6 kg	12.3 lbs / 5.6 kg
MAXIMUM NUMBER OF WELDS PER HOUR on a 12.7 mm diameter, 1.24 mm thick stainless steel tube	20	30
MAX WELDING CURRENT	80 A	80 A
OPERATING TEMPERATURE	+0°C / + 40 °C (32°F / 104°F)	+0°C / + 40 °C (32°F / 104°F)

CONSUMABLES & ACCESSORIES

ELECTRODES

PART NO.	DESCRIPTION	OUTSIDE DIAMETER OF THE TUBE TO BE WELDED (MIN - MAX)	
SCE10-09.0	Tungsten electrode diameter 1.0 mm, length 9 mm (per 10)	0.465 - 0.5"	11.8 - 12.7 mm
SCE10-10.0	Tungsten electrode diameter 1.0 mm, length 10.0 mm (per 10)	0.386 - 0.480"	9.8 - 12.2 mm
SCE10-11.0	Tungsten electrode diameter 1.0 mm, length 11.0 mm (per 10)	0.307 - 0.402"	7.8 - 10.2 mm
SCE10-12.0	Tungsten electrode diameter 1.0 mm, length 12.0 mm (per 10)	0.228 - 0.323"	5.8 - 8.2 mm
SCE10-13.0	Tungsten electrode diameter 1.0 mm, length 13.0 mm (per 10)	0.150 - 0.244"	3.8 - 6.2 mm
SCE10-14.0	Tungsten electrode diameter 1.0 mm, length 14.0 mm (per 10)	0.079 - 0.165"	2.0 - 4.2 mm

CLAMPING CASSETTES

Stainless steel clamping cassettes. One cassette is required for each tube diameter.
Can be used to weld tube-to-tube, tube-to-fitting, fitting-to-fitting.

PART NO.	DESCRIPTION	OUTSIDE DIAMETER OF THE TUBE TO BE WELDED (INCH / MM)	
X-500-CA03.00	Cassette for o/d = 3.00 mm (0.118")	0.118"	3.00 mm
X-500-CA03.18	Cassette for o/d = 1/8" (3.175 mm)	1/8"	3.18 mm
X-500-CA04.76	Cassette for o/d = 3/16" (4.763 mm)	3/16"	4.76 mm
X-500-CA06.00	Cassette for o/d = 6.00 mm (0.236")	0.236"	6.00 mm
X-500-CA06.35	Cassette for o/d = 1/4" (6,35 mm)	1/4"	6.35 mm
X-500-CA08.00	Cassette for o/d = 8.00 mm (0.315")	0.315"	8.00 mm
X-500-CA09.53	Cassette for o/d = 3/8" (9.525 mm)	3/8"	9.53 mm
X-500-CA10.00	Cassette for o/d = 10.00 mm (0.394")	0.394"	10.00 mm
X-500-CA12.00	Cassette for o/d = 12.00 mm (0.472")	0.472"	12.00 mm
X-500-CA12.70	Cassette for o/d = 1/2" (12.70 mm)	1/2"	12.70 mm
These cassettes can be used to weld fittings or tubes with a 6.35 mm straight length			

X-500 is compatible with AMI and MAGNATECH clamping cassettes, please contact us.

0.25" / 6.35 mm

TABLE MOUNT

The weld head is equipped with a hook that allows to hang the machine on this table mount, as well as on different other supports up to 5 mm thickness.

PART NO.	DESCRIPTION
SATFX-PSUP	Table mount for the X-500 and X-750 weld heads

LEAD EXTENSION

The X-500 weld head is delivered with a 8 m / 26 ft lead. To increase the operating distance between the weld head and the SAXX power source, cable extensions are available. It is strongly advised to use maximum one extension lead per weld head. Please contact us if your required lenght exceeds this maximum.

AIR / WATER COOLING	PART NO	DESCRIPTION	NET WEIGHT		PACKAGING DIMENSIONS		LEAD EXTENSION
X-500A AIR	SAFS-05MAX	5 m / 16.4 ft extension cable Air cooling - without wire	15.4 lbs	7 kg	16 x 23 x 10"	400 x 590 x 250 mm	
	SAFS-10MAX	10 m / 32.8 ft extension cable Air cooling - without wire	28.7 lbs	13 kg	16 x 23 x 10"	400 x 590 x 250 mm	
X-500E WATER	SAFS-05MX	5 m / 16.4 ft extension cable Water cooling - without wire	18 lbs	8.2 kg	16 x 23 x 10"	400 x 590 x 250 mm	
	SAFS-10MX	10 m / 32.8 ft extension cable Water cooling - without wire	35 lbs	15.9 kg	16 x 23 x 10"	400 x 590 x 250 mm	

ORBITAL WELDING SOLUTIONS

MICROFIT CLOSED WELD HEAD X-750

0.118 - 0.75" o/d / 3 - 19.05 mm o/d

SCAN QR CODE
TO WATCH VIDEO

AXXAIR
AN SPG GROUP BRAND

www.AXXAIR.com

ORBITAL WELDING
MICROFIT CLOSED WELD HEAD X-750

0.118 - 0.75" o/d / 3 - 19.05 mm o/d

Combine with Pipe Purge Masters (PPM) solutions

- **Functions:** Orbital TIG
- **Materials:** Any kind of stainless steel and exotic alloys
- **Powered by the SAXX power source range**
  (available in AMI compatible version with automatic calibration)

X-750 with collets

The microfit closed head X-750 is ideal for welding tubes and micro-fittings in tight spaces, such as in the semiconductor, aerospace, or pharmaceutical industry, while ensuring precision and reliability in every weld.

This weld head is water-cooled and is made for **high duty cycle orbital welding.** It covers the size range of 0.118 - 0.75" / 3 - 19.05 mm o/d using quick connect stainless steel collets without set screws.

MAIN FEATURES

- **High level of performance:** water-cooled machine
- **Greaseless operation:** compatible with international cleanroom application and operational standards
- **Optimized gas diffusion:** welds with very limited coloration
- **Integrated remote control:** start/stop, gas and electrode rotation
- **Easy maintenance and cleaning of the rotor:** with an integrated tool in the machine body
- **Compact and light:** 12.8 lbs / 5.8 kg with 8 meters cable (26 ft)

Water cooled

QUICK CONNECT STAINLESS STEEL COLLETS
machined to the diameter of the tube

HOOK
allows to hang the machine on different supports

SINGLE INTEGRATED TOOL
For disassembling the machine to clean the rotor, adjust/change the electrode

PIVOTING WINDOW
with shade 9 welding glass

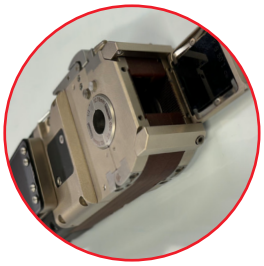

DJUSTABLE FORCE LAMPING SYSTEM
Allows precise adjustment of the rce of the collets on e tube to be welded and helps opening after welding.

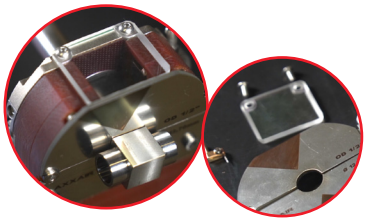

ACCESSORY: OFFSET ELECTRODE KIT
Made to weld tube-to-microfit

POWER SOURCE*

SAXX-201	SAXX-200	SAXX-210	SAXX-300
Orbital TIG welding power source 200A, 110 - 220v *with cooling system*	**Orbital TIG welding power source 200A, 110 - 220v** *with cooling system*	**Orbital TIG welding power source 210A, 110 - 220v**	**Orbital TIG welding power source 300A, 400v**

** An X-750 multi brand compatible version (AMI and Magnatech) is also available—see the ""Multi brand compatible orbital welding solutions" section in the brochure.*

DIMENSIONS (MM/INCH)

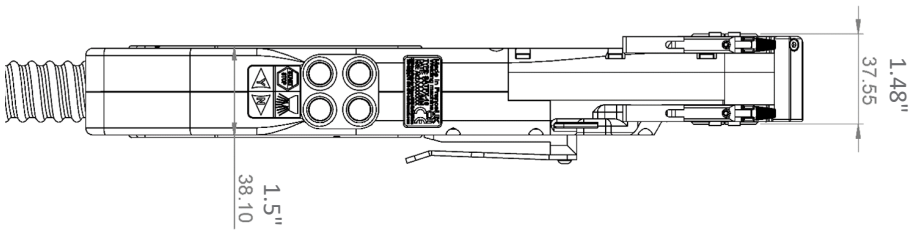

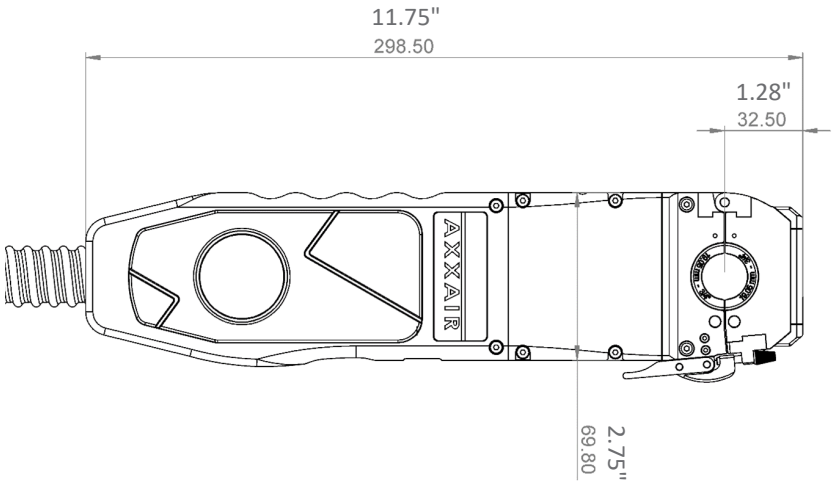

DELIVERY AND STORAGE

Delivered in a shockproof case with a hook lead

TECHNICAL FEATURES

PART NO.	X-750E
DESCRIPTION	Microfit closed weld head with 8 m / 26 ft cable **Water cooled**
TUBE DIAMETER (O/D)	3 - 19.05 mm
	0.118 - 0.75"
ELECTRODE DIAMETER	1.0 mm or 1.6 mm
	0.040" or 1/16"
WEIGHT WITH CABLE	12.8 lbs / 5.8 kg
MAXIMUM WEDLING CURRENT	120 A
DUTY CYCLE	80 A at 60%
OPERATING TEMPERATURE	+0°C / + 40 °C (32°F / 104°F)

ACCESSORIES

CLAMPING COLLETS

This weld head uses stainless steel collets, machined to the diameter of the tubes to be welded. A set of clamping collets consists of four half-shells matching the external diameter of the tube. The standard collets are installed and removed by a toll free quick-release mechanism.

To order the collets, replace the XX with the outside diameter of the tube in millimeters (within the limits of machine capacity). Example: A set of collets for a tube of 19.05 mm o/d = X-750-C19.05

PART NO.	DESCRIPTION	OUTSIDE DIAMETER OF THE TUBE TO BE WELDED (INCH / MM)		PICTURE
X-750-CXX	Stainless steel clamping collets (four half shells)	3 - 19.05 mm	0.118 - 3/4"	

OFFSET ELECTRODE KIT

This kit is designed to weld fittings with a minimum 6.35 mm / 0.25" straight section.

Per diameter of tube to be welded an offset electrode kit is required, that is mounted on one side of the head to hold the fittings. On the other side, standard collets are required to clamp the tube to be welded.

This kit includes: thin collets (2 half-shells), offset electrode holder, plastic window and mounting system.

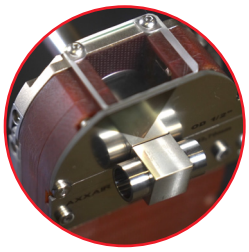

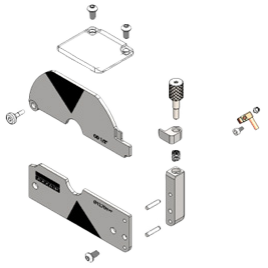

PART NO.	DESCRIPTION	OUTSIDE DIAMETER OF THE TUBE TO BE WELDED	
X-750-T03.00	Offset electrode kit for tube o/d = 3.00 mm	3.0 mm	0.118"
X-750-T03.18	Offset electrode kit for tube o/d = 3.18 mm	3.18 mm	1/8"
X-750-T04.76	Offset electrode kit for tube o/d = 4.76 mm	4.76 mm	3/16"
X-750-T06.00	Offset electrode kit for tube o/d = 6.00 mm	6.00 mm	0.236"
X-750-T06.35	Offset electrode kit for tube o/d = 6.35 mm	6.35 mm	1/4"
X-750-T08.00	Offset electrode kit for tube o/d = 8.00 mm	8.00 mm	0.315"
X-750-T09.53	Offset electrode kit for tube o/d = 09.53 mm	9.53 mm	3/8"
X-750-T10.00	Offset electrode kit for tube o/d = 10.00 mm	10.00 mm	0.394"
X-750-T12.00	Offset electrode kit for tube o/d = 12.00 mm	12.00 mm	0.472"
X-750-T12.70	Offset electrode kit for tube o/d = 12.70 mm	12.70 mm	1/2"
See section on consumables to find the electrodes required.			

These collets can be used to weld fittings or tubes with a minimum 6.35 mm / 0.25" straight length

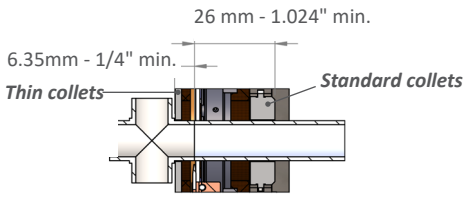

TABLE MOUNT

The weld head is equipped with a hook that allows to hang the machine on this table mount, as well as on different other supports up to 5 mm thickness.

PART NO.	DESCRIPTION	
SATFX-PSUP	Table mount for the X-500 and X-750 weld heads	

LEAD EXTENSION

The X-750 weld head is delivered with a 8 m / 26 ft lead. To increase the operating distance between the weld head and the SAXX power source, cable extensions are available. It is strongly advised to use maximum one extension lead per weld head. Please contact us if your required lenght exceeds this maximum.

FOR X-750E ONLY - WATER COOLING

PART NO.	DESCRIPTION	WEIGHT		PACKAGING DIMENSIONS	
SAFS-05MX	5 m /16.4 ft extension cable Water cooling - without wire	18 lbs	8.2 kg	16 x 23 x 10"	40 x 59 x 25 cm
SAFS-10MX	10 m /32.8 ft extension cable Water cooling - without wire	35 lbs	15.9 kg	16 x 23 x 10"	40 x 59 x 25 cm

CONSUMABLES

ELECTRODES

AXXAIR electrodes (sold in boxes of 10 units) are precisely sharpened to 20° angle with a flat tip, increasing the life of the electrodes.

Electrodes are pre-cut to cover the entire clamping range of the head without damaging the rotation system.
The electrode must be selected according to the outside diameter of the tube to be welded.

TUBE O/D (MM/INCH)		ELECTRODE DIAMETER 1.0 MM / 0.039" PART NO.	ELECTRODE DIAMETER 1.6 MM / 1/16" PART NO.	ELECTRODE LENGHT (MM/INCH)	
2.6 - 9.0	0.102 - 0.354"	SCE10-18.0	SCE16-18	18 mm	0.71"
8.6 - 15.0	0.338 - 0.590"	SCE10-15.0	SCE16-15	15 mm	0.59"
14.6 - 19.05	0.574 - 0.750"	SCE10-12.0	SCE16-12	12 mm	0.47"

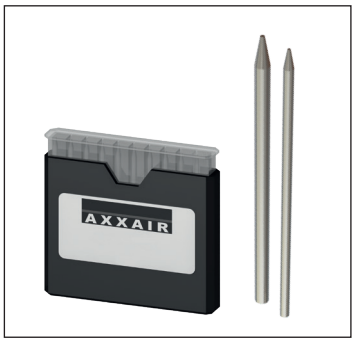

ELECTRODES FOR OFFSET HOLDER

TUBE O/D (MM/INCH)		ELECTRODE DIAMETER 1.0 MM / 0.039" PART NO.	ELECTRODE LENGHT (MM/INCH)	
2.4 - 4.4	0.094 - 0.173"	SCE10-13.0	13 mm	0.512"
4.4 - 6.4	0.173 - 0.252"	SCE10-12.0	12 mm	0.472"
6.4 - 8.4	0.252 - 0.315"	SCE10-11.0	11 mm	0.433"
8.4 - 10.4	0.315 - 0.409"	SCE10-10.0	10 mm	0.394"
10.4 - 12.4	0.409 - 0.488"	SCE10-09.0	9 mm	0.354"
12.4 - 12.7	0.488 - 0.500"	SCE10-08.0	8 mm	0.315"

AXXAIR
CS 330
3L

ORBITAL WELDING SOLUTIONS

MICROFIT CLOSED WELD HEAD SAMX-17

0.118 - 0.625" o/d / 3 - 17.2 mm o/d

SCAN QR CODE
TO WATCH VIDEO

AXXAIR
AN SPG GROUP BRAND

www.AXXAIR.com

MICROFIT CLOSED WELD HEAD SAMX-17

0.118 - 0.625" o/d / 3 - 17.2 mm o/d

Combine with Pipe Purge Masters (PPM) solutions

- **Function:** Orbital TIG welding
- **Materials:** Any kind of stainless steel and exotic alloys
- **Controlled by the SAXX power supplies**

The SAMX-17 MicroFit head with cassettes is the ideal solution for welding tubes and fittings with diameters of 3 mm / 0.118" and above, ensuring precision and reliability in every weld.

The machine is engineered to handle tubes and fittings, offering versatility in welding configurations. Whether it's tube-to-tube, tube-to-fitting, fitting-to-fitting, or any other combination, the SAMX-17 adapts seamlessly to meet the demands of your welding projects.

SAMX-17 with cassette

MAIN FEATURES

- High level of performance with **a duty cycle of 70A at 50% and 80A at 40%**
- **Grease-free operation:** compatible with clean room standards
- **Integrated remote control:** start/stop, gas and electrode rotation
- **Optimized inert gas diffusion:** welds with very limited coloration
- **Air cooling** : aluminimum side plates contribute to heat dissipation
- **Easy maintenance and cleaning :** thanks to a tool integrated in the machine body
- **Compact and light:** 5.5kg / 11 lbs with 8 meters cable (26ft)

Air cooled

DELIVERY AND STORAGE

Delivered in a shockproof case
Waterproof and dustproof

CONSTANT EFFORT LOCKING LEVER

Stady cassette holding, without the risk of over tightening

BELT HOOK

SINGLE INTEGRATED TOOL

For disassembling the machine, adjust/ change the electrode and position the jaws

OPTIMIZED CLAMPING SYSTEM OF THE CASSETTE

The tubes are optimally positioned within the cassettes that prevents deformation

Machine compatible with Swagelok cassettes, please contact us.

Complete configuration of a microfit closed head SAMX-17

Machine

+

Cassette standard, wide or thin side plates

+

Jaws

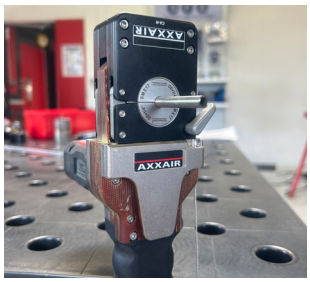

SAMX-17 with mounted cassette

Cassettes and jaws are not included and must be ordered separately.

POWER SOURCE

SAXX-201

Orbital TIG welding power source 200A, 110 - 220v
with or without cooling system

SAXX-200

Orbital TIG welding power source 200A, 110 - 220v
with or without cooling system

SAXX-210

Orbital TIG welding power source 210A, 110 - 220v

SAXX-300

Orbital TIG welding power source 300A, 400v

ELECTRODES

PART NO.	DESCRIPTION	OUTSIDE DIAMETER OF THE TUBE TO BE WELDED (MIN - MAX)		PICTURE
SCE10-14.0	Pre-ground tungsten electrode diameter 1.0 mm, length 14.0 mm (per 10)	13.4 - 17.3 mm	0.527 - 0.681"	
SCE10-15.0	Pre-ground tungsten electrode diameter 1.0 mm, length 15.0 mm (per 10)	11.4 - 15.8 mm	0.449 - 0.622"	
SCE10-16.0	Pre-ground tungsten electrode diameter 1.0 mm, length 16.0 mm (per 10)	9.4 - 13.8 mm	0.370 - 0.543"	
SCE10-17.5	Pre-ground tungsten electrode diameter 1.0 mm, length 17.5 mm (per 10)	6.4 - 10.8 mm	0.252 - 0.425"	
SCE10-18.0	Pre-ground tungsten electrode diameter 1.0 mm, length 18.0 mm (per 10)	5.4 - 9.8 mm	0.213 - 0.386"	
SCE10-20.0	Pre-ground tungsten electrode diameter 1.0 mm, length 20.0 mm (per 10)	2.0 - 5.8 mm	0.079 - 0.228"	

TECHNICAL FEATURES

PART NO.	SAMX-17
DESCRIPTION	Microfit closed welding head **with 8m cable**
TUBE DIAMETER	3 - 17.2 mm
	0.118 - 0.625"
ELECTRODE DIAMETER	1.0 mm
	0.04"
WEIGHT WITH CABLE	5.5 kg
	12 lbs
DUTY CYCLE AT 50%	70 A
DUTY CYCLE AT 40%	80 A
MAX WELDING CURRENT	100 A
OPERATING TEMPERATURE	+0°C / + 40 °C (32°F / 104°F)

DIMENSIONS (MM/INCH)

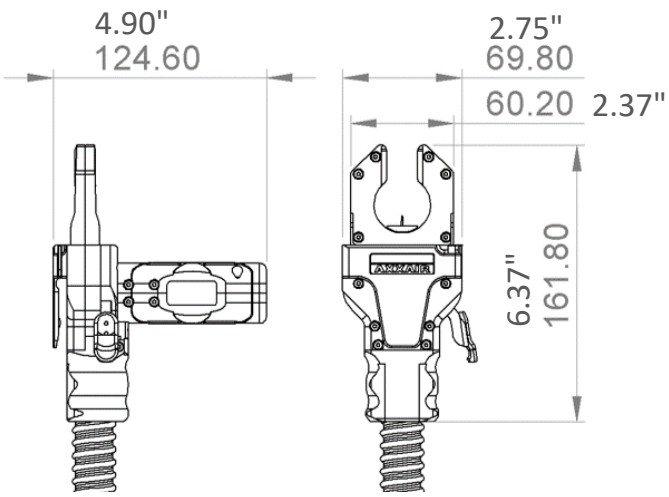

CASSETTE & SIDE PLATES

The standard cassette set is recommended for microfit welding. Subsequently, the thin or wide side plates can be ordered for specific welds.

STANDARD CASSETTE

Complete kit

PART NO. SAMX17-CAB01

DIMENSIONS (MM/INCH)

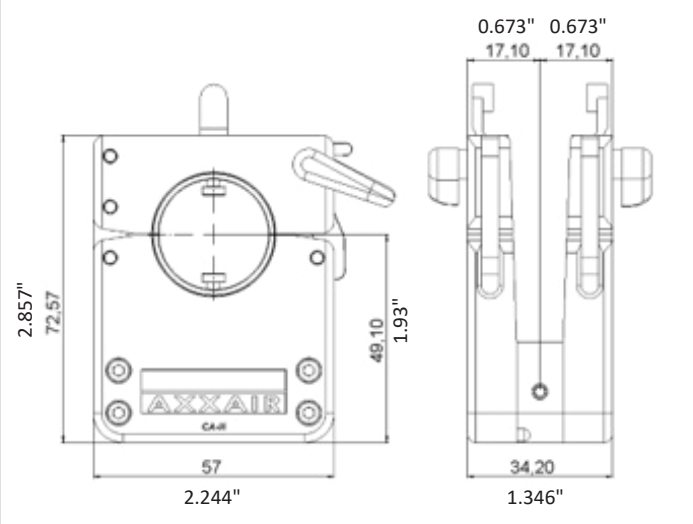

CONFIGURATION OF THE STANDARD CASSETTE (COMPLETE KIT)

PART NO.	DESCRIPTION
SAMX17-CADB01	Standard right side plate
SAMX17-CAGB01	Standard left side plate
SAMX17-CAMB01	Standard central body SAMX (common to all side plates)
It is possible to order the entire cassette assembly or only the right or left side plates with the center body for a customized configuration.	

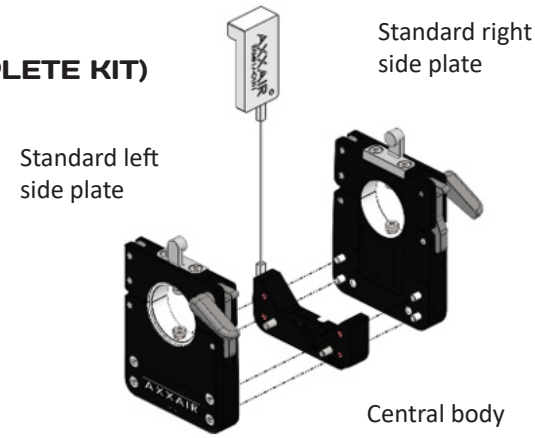

THIN SIDE PLATES		CENTRAL BODY	WIDE SIDE PLATE
PART NO. SAMX17-CADB02	**PART NO. SAMX17-CAGB02**	**PART NO. SAMX17-CAMB01**	**PART NO. SAMX17-CADGB03**
Right thin side plate	Left thin side plate	Central body SAMX (common to all side plates)	Wide side plate (right and left)

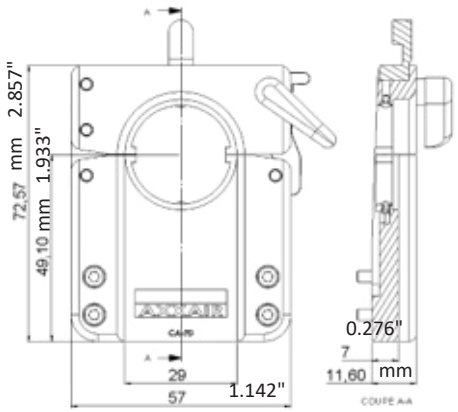

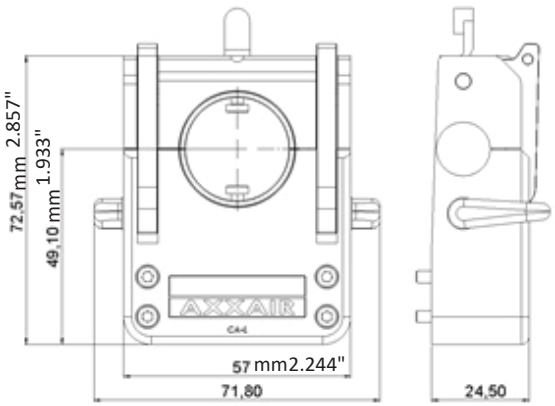

JAWS FOR CASSETTES

JAWS FOR STANDARD CASSETTE

PART NO.	DESCRIPTION	OUTSIDE DIAMETER OF THE TUBE TO BE WELDED (INCH / MM)	
SMX17-03	Collets (pair) for standard cassette o/d = 3.00 mm (0.118")	0.118"	3.00 mm
SMX17-03.175	Collets (pair) for standard cassette o/d = 1/8" (3.175 mm)	1/8"	3.175 mm
SMX17-04	Collets (pair) for standard cassette o/d = 4.00 mm (0.157")	0.157"	4.00 mm
SMX17-04.763	Collets (pair) for standard cassette o/d = 3/16" (4.763 mm)	3/16"	4.763 mm
SMX17-05	Collets (pair) for standard cassette o/d = 5.00 mm (0.197")	0.197"	5.00 mm
SMX17-06	Collets (pair) for standard cassette o/d = 6.00 mm (0.236")	0.236"	6.00 mm
SMX17-06.35	Collets (pair) for standard cassette o/d = 1/4" (6,35 mm)	1/4"	6.35 mm
SMX17-07.938	Collets (pair) for standard cassette o/d = 5/16" (7.938 mm)	5/16"	7.938 mm
SMX17-08	Collets (pair) for standard cassette o/d = 8.00 mm (0.315")	0.315"	8.00 mm
SMX17-09	Collets (pair) for standard cassette o/d = 9.00 mm (0.354")	0.354"	9.00 mm
SMX17-09.525	Collets (pair) for standard cassette o/d = 3/8" (9.525 mm)	3/8"	9.525 mm
SMX17-10	Collets (pair) for standard cassette o/d = 10.00 mm (0.394")	0.394"	10.00 mm
SMX17-10.20	Collets (pair) for standard cassette o/d = 10.20 mm (0.402")	0.402"	10.20 mm
SMX17-11	Collets (pair) for standard cassette o/d = 11.00 mm (0.433")	0.433"	11.00 mm
SMX17-12	Collets (pair) for standard cassette o/d = 12.00 mm (0.472")	0.472"	12.00 mm
SMX17-12.70	Collets (pair) for standard cassette o/d = 1/2" (12.70 mm)	1/2"	12.70 mm
SMX17-13.50	Collets (pair) for standard cassette o/d = 13.50 mm (0.531")	0.531"	13.50 mm
SMX17-14	Collets (pair) for standard cassette o/d = 14.00 mm (0.551")	0.551"	14.00 mm
SMX17-14.287	Collets (pair) for standard cassette o/d = 9/16" (14.287 mm)	9/16"	14.287 mm
SMX17-15	Collets (pair) for standard cassette o/d = 15.00 mm (0.591")	0.591"	15.00 mm
SMX17-15.875	Collets (pair) for standard cassette o/d = 5/8" (15.875 mm)	5/8"	15.875 mm
SMX17-16	Collets (pairs) for standard cassette o/d = 16.00 mm (0.630")	0.630"	16.00 mm
SMX17-17.2	Collets (pair) for standard cassette o/d = 17.20 mm (0.677")	0.677"	17.20 mm

Jaws for standard cassette

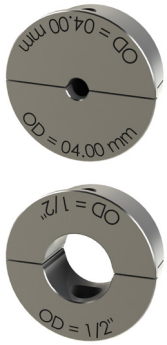

- These jaws (sold as pair) are compatible only with the **standard** side plates
- 1 set of collets includes two half shells. 2 sets are required to cover both sides of the cassette (four half shells).

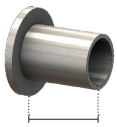

Minimum straight length of the tube: 0.689" / 17.5 mm

JAWS FOR THIN SIDE PLATE

PART NO.	DESCRIPTION	OUTSIDE DIAMETER OF THE TUBE TO BE WELDED (INCH / MM)	
SMX17-F03	Collets (pair) for thin side plate o/d = 3.00 mm (0.118")	0.118"	3.00 mm
SMX17-F03.175	Collets (pair) for thin side plate o/d = 1/8" (3.175 mm)	1/8"	3.175 mm
SMX17-F06	Collets (pair) for thin side plate o/d = 6.00 mm (0.236")	0.236"	6.00 mm
SMX17-F06.35	Collets (pair) for thin side plate o/d = 1/4" (6.35 mm)	1/4"	6.35 mm
SMX17-F08	Collets (pair) for thin side plate o/d = 8.00 mm (0.315")	0.315"	8.00 mm
SMX17-F09.525	Collets (pair) for thin side plate o/d = 3/8" (9.525 mm)	3/8"	9.525 mm
SMX17-F12	Collets (pair) for thin side plate o/d = 12.00 mm (0.472")	0.472"	12.00 mm
SMX17-F12.70	Collets (pair) for thin side plate o/d = 1/2" (12.70 mm)	1/2"	12.70 mm
SMX17-F14	Collets (pair) for thin side plate o/d = 14.00 mm (0.551")	0.551"	14.00 mm
SMX17-F16	Collets (pair) for thin side plate o/d = 16.00 mm (0.630")	0.630"	16.00 mm

Jaws for thin side plate

- These jaws (sold as pair) are compatible only with the **thin** side plates
- 1 set of collets includes two half shells. 2 sets are required to cover both sides of the cassette (four half shells).

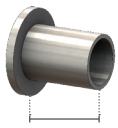

Minimum straight length of the tube: 0.5" / 12.70 mm

TUBE JAWS FOR WIDE SIDE PLATE

PART NO.	DESCRIPTION	O/D OF THE TUBE TO BE WELDED (INCH / MM)	
SMX17-LT03	Tube collets (pair) for wide side plate - o/d 3.00 mm (0.118")	0.118"	3.00 mm
SMX17-LT03.175	Tube collets (pairs) for wide side plate - o/d 1/8" (3.175 mm)	1/8"	3.175 mm
SMX17-LT06	Tube collets (pair) for wide side plate - o/d 6.00 mm (0.236")	0.236"	6.00 mm
SMX17-LT06.35	Tube collets (pairs) for wide side plate - o/d 1/4" (6.35 mm)	1/4"	6.35 mm
SMX17-LT08	Tube collets (pair) for wide side plate - o/d 8.00 mm (0.315")	0.315"	8.00 mm
SMX17-LT09.525	Tube collets (pair) for wide side plate - o/d 3/8" (9.525mm)	3/8"	9.525 mm
SMX17-LT10	Tube collets (pair) for wide side plate - o/d 10.00 mm (0.394")	0.394"	10.00 mm
SMX17-LT12	Tube collets (pair) for wide side plate - o/d 12.00 mm (0.472")	0.472"	12.00 mm
SMX17-LT12.70	Tube collets (pair) for wide side plate - o/d 1/2" (12.7 mm)	1/2"	12.7 mm
SMX17-LT14	Tube collets (pair) for wide side plate - o/d 14.00 mm (0.551")	0.551"	14.00 mm
SMX17-LT15.875	Tube collets (pair) for wide side plate - o/d 5/8" (15.875 mm)	5/8"	15.875 mm
SMX17-LT16	Tube collets (pair) for wide side plate - o/d 16.00 mm (0.630")	0.630"	16.00 mm

Tube jaws for wide side plate

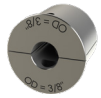

- These jaws (sold as pair) are compatible only with the **wide** side plates
- 1 set of collets includes two half shells. 2 sets are required to cover both sides of the cassette (four half shells).

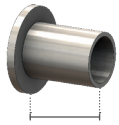

Minimum straight length of the tube: 1.189" / 30.20 mm

FITTING JAWS FOR WIDE SIDE PLATE

PART NO.	DESCRIPTION	FITTING BODY SIZE (INCH / MM)	FITTING BODY SIZE
SMX17-LRA	Fitting collets (pair) - 1/8" - 1/4" and 6 mm	1/8" - 1/4" - 6 mm	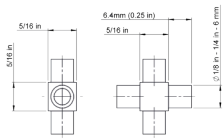
SMX17-LRB	Fitting collets (pair) - 3/8" - 8mm and 10 mm	3/8" - 8 mm - 10 mm	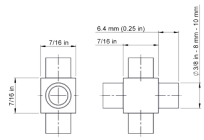
SMX17-LRC	Fitting collets (pair) - 1/2" - 12.7 mm	1/2" - 12.7 mm	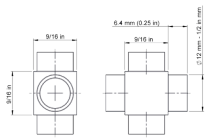

Fitting jaws for wide side plate

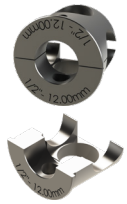

- These jaws (sold as pair) are compatible only with the **wide** side plates
- 1 set of collets includes two half shells. 2 sets are required to cover both sides of the cassette (four half shells).

OTHER ACCESSORIES

MACHINE SUPPORT

This bracket replaces the center part of the cassette (SAMX17-CAMB01). The use of this holder also allows the cassette to cool down quicker, improving the productivity.

PART NO.	DESCRIPTION
SAMX17-SUP	Cassette holder for SAMX-17 machine

LEAD EXTENSION

The SAMX-17 weld head is delivered with a 8 m / 26 ft lead. To increase the operating distance between the weld head and the SAXX power source, cable extensions are available. It is strongly advised to use maximum one extension lead per weld head. Please contact us if your required lenght exceeds this maximum.

PART NO.	DESCRIPTION	NET WEIGHT		PACKAGING DIMENSIONS	
SAFS-05MAX	5m /16.4 ft extension cable Air cooling - without wire	15.4 lbs	7 kg	16 x 23 x 10"	40 x 59 x 25 cm
SAFS-10MAX	10 m /32.8 ft extension cable Air cooling - without wire	28.7 lbs	13 kg	16 x 23 x 10"	40 x 59 x 25 cm

ORBITAL WELDING SOLUTIONS

MICROFIT CLOSED WELD HEAD SAMX-25

0.236 - 1" o/d / 6 - 25.4 mm o/d

AXXAIR
AN SPG GROUP BRAND

www.AXXAIR.com

MICROFIT CLOSED WELD HEAD SAMX-25

0.236 - 1" o/d / 6 - 25.40 mm o/d

Combine with Pipe Purge Masters (PPM) solutions

- **Function:** Orbital TIG welding
- **Materials:** Any kind of stainless steel and exotic alloys
- **Powered by the SAXX power source**

SAMX-25 with cassette

The SAMX-25 MicroFit head with cassette is the ideal solution for welding tubes with diameters of 6 mm and above, ensuring precision and reliability in every weld.

The machine is engineered to handle tubes and fittings, offering versatility in welding configurations. Whether it's tube-to-tube, tube-to-fitting, fitting-to-fitting, or any other combination, the SAMX-25 adapts seamlessly to meet the demands of your welding projects.

DELIVERY AND STORAGE

Delivered in a shockproof case with a hook lead

MAIN FEATURES

- High level of performance with **a high duty cycle**
- **Grease-free operation:** compatible with clean room standards
- **Integrated remote control:** start/stop, gas and electrode rotation
- **Optimized inert gas diffusion:** welds with very limited coloration
- **Easy maintenance and cleaning:** thanks to a tool integrated in the machine body
- **Compact and light:** 6.5kg / 13 lbs with 8 meters lead (26 ft)

CONSTANT LOCKING EFFORT
Steady cassette holding, without the risk of over tightening

BELT HOOK

SINGLE INTEGRATED TOOL
To disassemble the machine, adjust/ change the electrode and position the jaws

OPTIMIZED CLAMPING SYSTEM OF THE CASSETTE
The tubes are optimally positioned within the cassettes that prevents deformation

Water cooled

Air cooled

Machine compatible with the Swagelok cassettes, please contact us.

Complete configuration of a microfit closed head SAMX-25

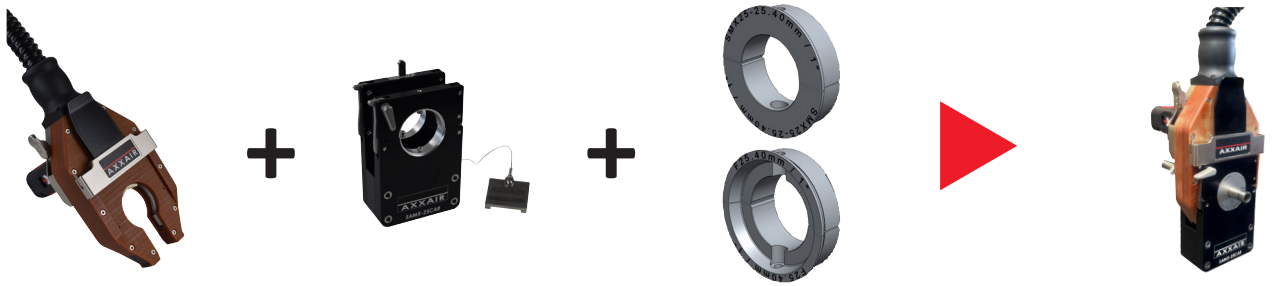

Machine	Cassette	Jaws standard / thin	SAMX-25 with mounted cassette

Cassettes and jaws are not included and must be ordered separately.

POWER SOURCE

SAXX-201	SAXX-200	SAXX-210	SAXX-300
Orbital TIG welding power source 200A, 110 - 220v *with or without cooling system*	**Orbital TIG welding power source 200A, 110 - 220v** *with or without cooling system*	**Orbital TIG welding power source 210A, 110 - 220v**	**Orbital TIG welding power source 300A, 400v**

ELECTRODES (SOLD BY PACK OF 10)

PART NO.	DESCRIPTION	OUTSIDE DIAMETER OF THE TUBE TO BE WELDED (MIN - MAX)		PICTURE
SCE16-28.5	Pre-ground tungsten electrode diameter 1.6 mm (1/16") length 28.5 mm (per 10)	0.236 - 0.618"	6 - 15.7 mm	
SCE16-23.5	Pre-ground tungsten electrode diameter 1.6 mm (1/16") length 23.5 mm (per 10)	0.618 - 1"	15.7 - 25.4 mm	

SAMX-25 TECHNICAL FEATURES

PART NO.	SAMX-25A	SAMX-25E
DESCRIPTION	Microfit closed weld head with 8m / 26ft cable **Air cooled**	Microfit closed weld head with 8m / 26ft cable **Water cooled**
TUBE DIAMETER (O/D)	6 - 25.40 mm	6 - 25.40 mm
	0.236" - 1"	0.236" - 1"
ELECTRODE DIAMETER	1.6 mm	1.6 mm
	1/16"	1/16"
WEIGHT WITH CABLE	6.5 kg	6.5 kg
	14 lbs	14 lbs
DUTY CYCLE	75A at 50%	100A at 80%
MAX WELDING CURRENT	100 A	120 A
OPERATING TEMPERATURE	+0°C / + 40 °C (32°F / 104°F)	+0°C / + 40 °C (32°F / 104°F)

DIMENSIONS (MM/INCH)

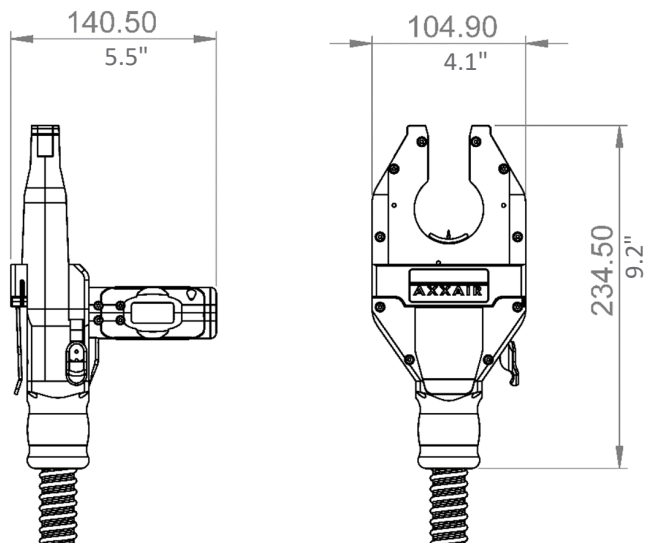

CASSETTES

Cassettes and jaws are not included and must be ordered separately.

STANDARD CASSETTE

Complete kit

PART NO. SAMX25-CAB01

DIMENSIONS (MM/INCH)

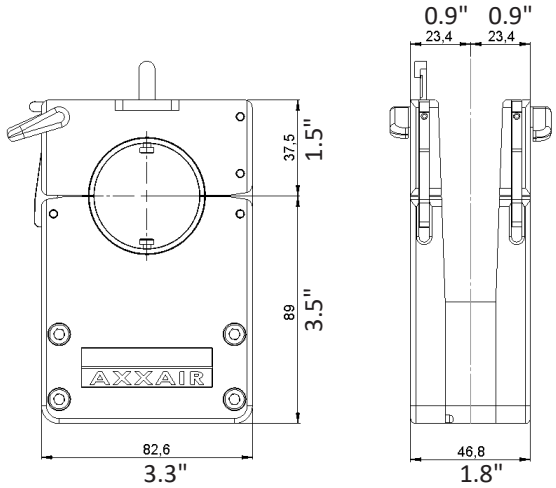

JAWS FOR CASSETTES: STANDARD CLAMPING JAWS

- Stainless steel jaws
- 1 set of collets includes: two half shells
  2 sets are required to cover both sides of the cassette (four half shells).

PART NO.	DESCRIPTION	OUTSIDE DIAMETER OF THE TUBE TO BE WELDED (INCH / MM)	
SMX25-06.00	Jaws (pair) for standard cassette o/d = 6.00 mm (0.236")	0.236"	6.00 mm
SMX25-06.35	Jaws (pair) for standard cassette o/d = 1/4" (6,35 mm)	1/4"	6.35 mm
SMX25-07.93	Jaws (pair) for standard cassette o/d = 5/16" (7.938 mm)	5/16"	7.938 mm
SMX25-08.00	Jaws (pair) for standard cassette o/d = 8.00 mm (0.315")	0.315"	8.00 mm
SMX25-09.52	Jaws (pair) for standard cassette o/d = 3/8" (9.525 mm)	3/8"	9.525 mm
SMX25-10.00	Jaws (pair) for standard cassette o/d = 10.00 mm (0.394")	0.394"	10.00 mm
SMX25-12.00	Jaws (pair) for standard cassette o/d = 12.00 mm (0.472")	0.472"	12.00 mm
SMX25-12.70	Jaws (pair) for standard cassette o/d = ½" (12.70 mm)	1/2"	12.70 mm
SMX25-14.00	Jaws (pair) for standard cassette o/d = 14.00 mm (0.551")	0.551"	14.00 mm
SMX25-15.00	Jaws (pair) for standard cassette o/d = 15.00 mm (0.591")	0.591"	15.00 mm
SMX25-15.87	Jaws (pair) for standard cassette o/d = 5/8" (15.875 mm)	5/8"	15.875 mm
SMX25-16.00	Jaws (pair) for standard cassette o/d = 16.00 mm (0.630")	0.630"	16.00 mm
SMX25-18.00	Jaws (pair) for standard cassette o/d = 18.00 mm (0.709")	0.709"	18.00 mm
SMX25-19.00	Jaws (pair) for standard cassette o/d = 19.00 mm (0.748")	0.748"	19.00 mm
SMX25-19.05	Jaws (pair) for standard cassette o/d = 3/4" (19.05 mm)	3/4"	19.05 mm
SMX25-20.00	Jaws (pair) for standard cassette o/d = 20.00 mm (0.787")	0.787"	20.00 mm
SMX25-22.00	Jaws (pair) for standard cassette o/d = 22.00 mm (0.866")	0.866"	22.00 mm
SMX25-22.22	Jaws (pair) for standard cassette o/d = 7/8" (22.22mm)	7/8"	22.22 mm
SMX25-23.00	Jaws (pair) for standard cassette o/d = 23.00 mm (0.905")	0.905"	23.00 mm
SMX25-25.00	Jaws (pair) for standard cassette o/d = 25.00 mm (0.984")	0.984"	25.00 mm
SMX25-25.40	Jaws (pair) for standard cassette o/d = 1" (25.40 mm)	1"	25.40 mm

These jaws require a minimum straight lenght of the welding piece of 23.4 mm / 0.905"

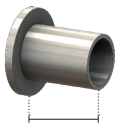

23.40 mm / 0.905"

JAWS FOR CASSETTES: THIN CLAMPING JAWS

- Thin clamping jaws are recommended to weld fittings
- 1 set of collets includes: two half shells
  2 sets are required to cover both sides of the cassette (four half shells).

PART NO.	DESCRIPTION	OUTSIDE DIAMETER OF THE TUBE TO BE WELDED (INCH / MM)	
SMX25-F06.00	Jaws (pair) for standard cassette o/d = 6.00 mm (0.236")	0.236"	6.00 mm
SMX25-F06.35	Jaws (pair) for standard cassette o/d = 1/4" (6,35 mm)	1/4"	6.35 mm
SMX25-F07.93	Jaws (pair) for standard cassette o/d = 5/16" (7.938 mm)	5/16"	7.938 mm
SMX25-F08.00	Jaws (pair) for standard cassette o/d = 8.00 mm (0.315")	0.315"	8.00 mm
SMX25-F09.52	Jaws (pair) for standard cassette o/d = 3/8" (9.525 mm)	3/8"	9.525 mm
SMX25-F10.00	Jaws (pair) for standard cassette o/d = 10.00 mm (0.394")	0.394"	10.00 mm
SMX25-F12.00	Jaws (pair) for standard cassette o/d = 12.00 mm (0.472")	0.472"	12.00 mm
SMX25-F12.70	Jaws (pair) for standard cassette o/d = 1/2" (12.70 mm)	1/2"	12.70 mm
SMX25-F14.00	Jaws (pair) for standard cassette o/d = 14.00 mm (0.551")	0.551"	14.00 mm
SMX25-F15.00	Jaws (pair) for standard cassette o/d = 15.00 mm (0.591")	0.591"	15.00 mm
SMX25-F15.87	Jaws (pair) for standard cassette o/d = 5/8" (15.875 mm)	5/8"	15.875 mm
SMX25-F16.00	Jaws (pair) for standard cassette o/d = 16.00 mm (0.630")	0.630"	16.00 mm
SMX25-F18.00	Jaws (pair) for standard cassette o/d = 18.00 mm (0.709")	0.709"	18.00 mm
SMX25-F19.00	Jaws (pair) for standard cassette o/d = 19.00 mm (0.748")	0.748"	19.00 mm
SMX25-F19.05	Jaws (pair) for standard cassette o/d = 3/4" (19.05 mm)	3/4"	19.05 mm
SMX25-F20.00	Jaws (pair) for standard cassette o/d = 20.00 mm (0.787")	0.787"	20.00 mm
SMX25-F22.00	Jaws (pair) for standard cassette o/d = 22.00 mm (0.866")	0.866"	22.00 mm
SMX25-F22.22	Jaws (pair) for standard cassette o/d = 7/8" (22.22mm)	7/8"	22.22 mm
SMX25-F23.00	Jaws (pair) for standard cassette o/d = 23.00 mm (0.905")	0.905"	23.00 mm
SMX25-F25.00	Jaws (pair) for standard cassette o/d = 25.00 mm (0.984")	0.984"	25.00 mm
SMX25-F25.40	Jaws (pair) for standard cassette o/d = 1" (25.40 mm)	1"	25.40 mm

These jaws require a minimum straight lenght of the welding piece of 19.05 mm / 0.748"

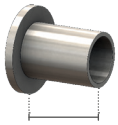

19.05 mm / 0.748"

OTHER ACCESSORIES

LEAD EXTENSION

The SAMX-25 weld head is delivered with a 8 m / 26 ft lead. To increase the operating distance between the weld head and the SAXX power source, cable extensions are available. It is strongly advised to use maximum one extension lead per weld head.

Please contact us if your required lenght exceeds this maximum.

FOR SAMX-25A - AIR COOLING

PART NO.	DESCRIPTION	WEIGHT		PACKAGING DIMENSIONS	
SAFS-05MAX	5 m / 16.4 ft extension cable air cooling - without wire	15.4 lbs	7 kg	16 x 23 x 10"	40 x 59 x 25 cm
SAFS-10MAX	10 m / 32.8 ft extension cable air cooling - without wire	28.7 lbs	13 kg	16 x 23 x 10"	40 x 59x 25 cm

FOR SAMX-25E - WATER COOLING

PART NO.	DESCRIPTION	WEIGHT		PACKAGING DIMENSIONS	
SAFS-05MX	5 m / 16.4 ft extension cable water cooling - without wire	18 lbs	8.2 kg	16 x 23 x 10"	40 x 59 x 25 cm
SAFS-10MX	10 m / 32.8 ft extension cable water cooling - without wire	35 lbs	15.9 kg	16 x 23 x 10"	40 x 59 x 25 cm

ORBITAL WELDING SOLUTIONS

CLOSED WELD HEAD RANGE: SATFX-52 / SATFX-76 / SATFX-115

0.25 - 4.5" o/d / 6 - 115 mm o/d

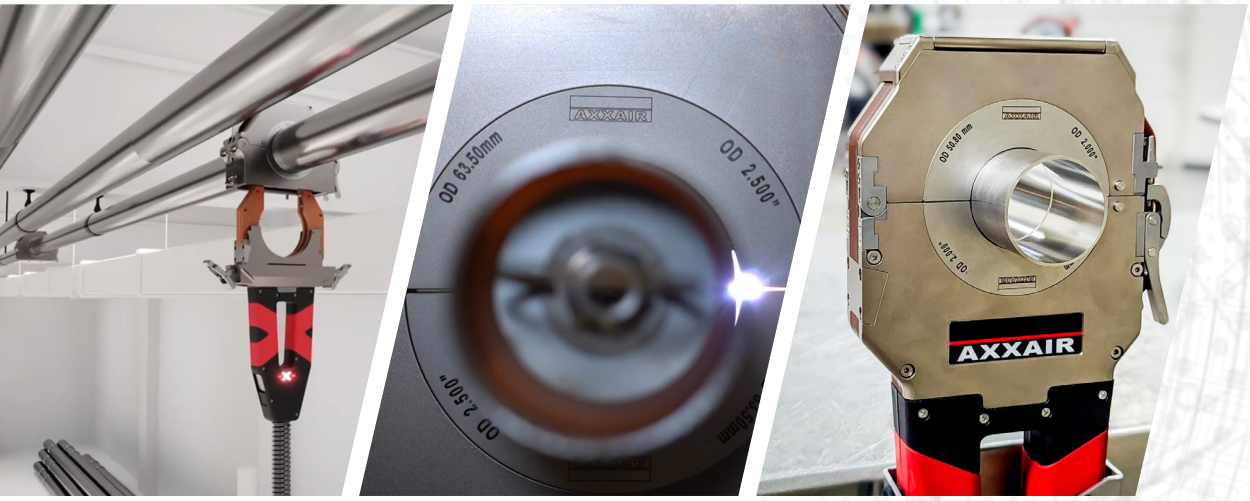

SCAN QR CODE
TO WATCH VIDEO

AXXAIR
AN SPG GROUP BRAND

www.AXXAIR.com

CLOSED ORBITAL WELD HEAD SATFX 52-76-115

0.25 - 4.5" o/d / 6 - 115 mm o/d

Combine with Pipe Purge Masters (PPM) solutions

- **Function:** Orbital TIG welding
- **Materials:** Any kind of steel and exotic alloys
- **Powered by the SAXX power source**

The SATFX closed weld heads offer the ability to achieve high-quality and repeatable welds in confined spaces.

These closed heads are suitable for orbital welding through a simple fusion process without adding filler metal, making them ideal for thin tubes of various grades of stainless steel (less than 3 mm thick). Also, they are essential for welding nickel or titanium-based alloys sensitive to oxidation, ensuring installations with impeccable resistance to chemicals or heat.

Commonly used in industries with high standards, such as aeronautics, semi-conductors, pharmaceuticals, and food processing, the narrow width of the head suits construction sites with limited straight sections, as well as workshops and clean rooms.

MAIN FEATURES

- **Optimized gas diffusion**
- **Grease free operation**: compatible with clean room standards
- **Integrated remote control:** start/stop, gas and electrode rotation, **and illuminated logo** that shows status of the machine
- **Easy cleaning and maintenance**
- Lead length: 8 m / 27 ft

SATFX-52	SATFX-76	SATFX-115

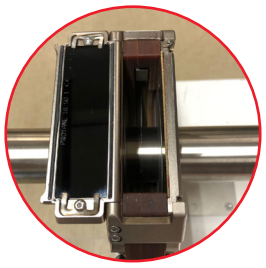

WIDE PIVOTING WINDOW
with shade 10 welding lens

STAINLESS STEEL JAWS WITH QUICK ASSEMBLY WITHOUT TOOLS
Standard and wide clamping jaws for increased rigidity when welding accessories

CASSETTES (ACCESSORY)
Cassettes for welding in confined areas. Easy positioning of the cassette on the parts to be welded before fixing the central body of the head

ADJUSTABLE FORCE CLAMPING SYSTEM
to ensure a consistent clamping of the machine

OPTIMIZED HANDLING
ergonomic design with soft touch compound areas

Water cooled

POWER SOURCE*

SAXX-201	SAXX-200	SAXX-210	SAXX-300
Orbital TIG welding power source 200A, 110 - 220v *with cooling system*	**Orbital TIG welding power source 200A, 110 - 220v** *with cooling system*	**Orbital TIG welding power source 210A, 110 - 220v**	**Orbital TIG welding power source 300A, 400v**

** Closed head multi brand compatible versions (AMI and Magnatech) are also available—see the "Multi brand compatible orbital welding solutions" section in the brochure.*

DIMENSIONS (MM/INCH)

DIM	SATFX-52		SATFX-76		SATFX-115	
A	375 mm	14.76"	399 mm	15.71"	439 mm	17.28"
B	142 mm	5.59"	166 mm	6.53"	206 mm	8.11"
C	37.6 mm	1.48"	37.6 mm	1.48"	37.6 mm	1.48"
D	160 mm	6.3"	187 mm	7.36"	242 mm	9.53"

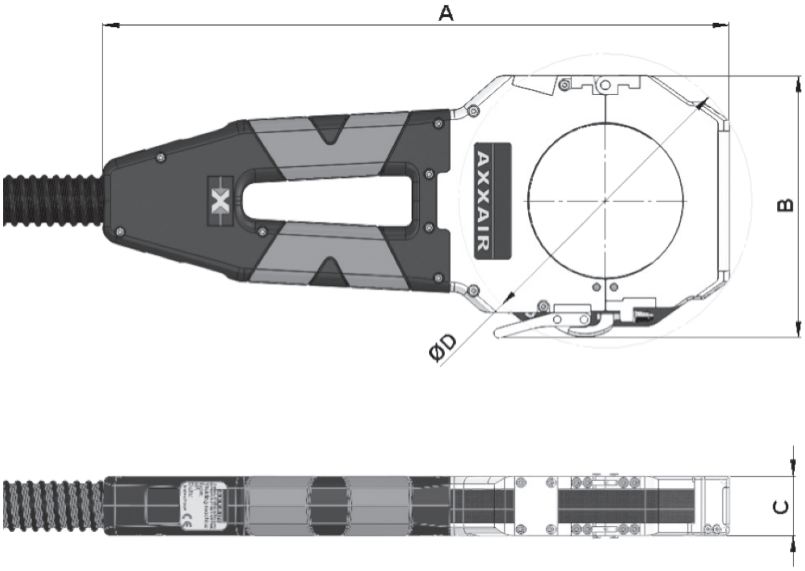

DELIVERY AND STORAGE

Delivered in a shockproof case with a hook lead

TECHNICAL FEATURES

PART NO	SATFX-52	SATFX-76	SATFX-115
DESCRIPTION	Closed welding head with 8 m / 26 ft lead **Water cooled**	Closed welding head with 8 m / 26 ft lead **Water cooled**	Closed welding head with 8 m / 26 ft lead **Water cooled**
TUBE DIAMETER (O/D)	6 - 52 mm	6 - 77 mm	12 - 115 mm
	0.25 - 2"	0.25 - 3"	0.5 - 4.5"
ELECTRODE DIAMETER	1.6 or 2.4 mm	1.6 or 2.4 mm	1.6 or 2.4 mm
	1/16 or 3/32	1/16 or 3/32	1/16 or 3/32
WEIGHT WITH CABLE	18.96 lbs / 8.6 kg	19.62 lbs / 8.9 kg	20.72 lbs / 9.4 kg
DUTY CYCLE AT 100%	100 A	100 A	100 A
MAX WELDING CURRENT	150 A	150 A	150 A
OPERATING TEMPERATURE	+0°C / + 40 °C (32°F / 104°F)	+0°C / + 40 °C (32°F / 104°F)	+0°C / + 40 °C (32°F / 104°F)

ACCESSORIES

CLAMPING JAWS

Thin or wide

PART NO. SMNXXX-XX* / SMLXXX-XX*

ADAPTATION SPACERS

PART NO. SMNXXX-ETXXX*

ELBOW FLANGES

See Accessories & consumables for SATFX

CASSETTES

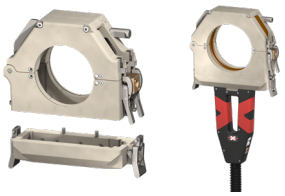

PART NO. SATFXXX-CA01*

TABLE MOUNTS

PART NO. SATFX-SUP

PURGING KITS

PART NO. SKIF-01 / SKIB-01

ELECTRODE HOLDERS

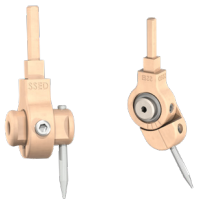

PART NO. SSEDX / SSEIX

LEAD EXTENSION

5 or 10 meters

PART NO. SAFS-05MX / SAFS-10MX

PPM PIPE PURGE MASTERS AN GROUP BRAND

Other accessories are available on request depending on the configuration of the tubes to be welded.
Discover also all Pipe Purge Masters (PPM) accessories for purging solutions!
www.PURGEMASTERS.com

CONSUMABLES

ELECTRODES

Diameter 1.6 or 2.4 mm / 1/16 or 3/32"

PART NO. SCE16-XX / SCE24-XX

* XX = DIAMETER
* XXX = MODEL SATFX52 / SATFX76 / SATFX115

ORBITAL WELDING SOLUTIONS

CLOSED WELD HEAD SATFX-170

1.5 - 6.625" o/d / 38 - 170 mm o/d

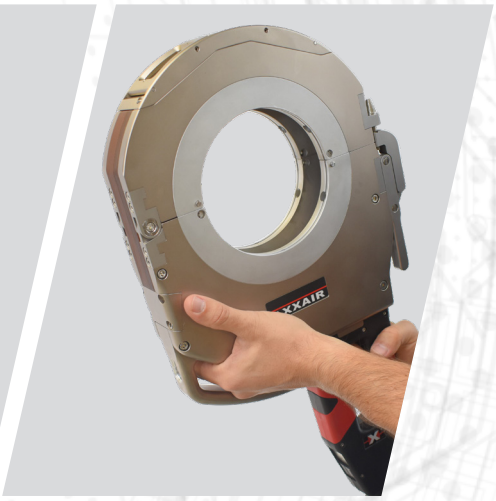

AXXAIR
AN SPG GROUP BRAND

www.AXXAIR.com

CLOSED ORBITAL WELD HEAD SATFX-170

1.5 - 6.625" o/d / 38 - 170 mm o/d

Combine with Pipe Purge Masters (PPM) solutions

- **Function:** Orbital TIG welding
- **Materials:** Any kind of steel and exotic alloys
- **Powered by the SAXX power source**

SATFX-170

Closed orbital welding heads have become essential in various industries, such as pharmaceutical, chemical, food and beverage sectors. These industries demand high-precision and high-quality welding solutions, especially for large diameter tubes and thick walls.

AXXAIR's SATFX range of closed weld heads is specifically designed to meet these increasing demands, offering reliable and consistent performance. They enable the creation of precise, repeatable and high-quality welds, which are crucial for ensuring the integrity and safety of piping systems used in these sensitive industries. Therefore, their use is increasingly sought after, perfectly meeting the specific needs of the most demanding industrial applications.

MAIN FEATURES

- Operating **without grease**: compatible with clean room standards
- **Direct gas supply** with an optimized gas diffusion system. Max flow rate: 60l/min
- **Integrated remote control:** start/stop, gas and electrode rotation, **and illuminated logo** that shows status of the machine
- Easy maintenance and cleaning
- Lead length: 8 m / 27 ft

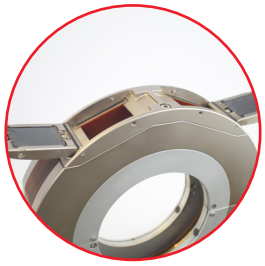

2 PIVOTING WINDOWS with shade 10 **welding glass**

INTEGRATED OFFSET ELECTRODE ADJUSTMENT

TWO ERGONOMIC HANDLES to facilitate the handling and positioning of the head

ADJUSTABLE CLAMPING PRESSURE SYSTEM to ensure a consistent clamping of the machine

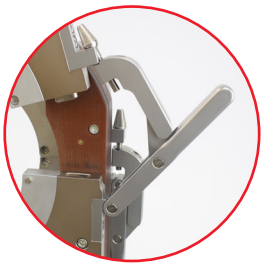

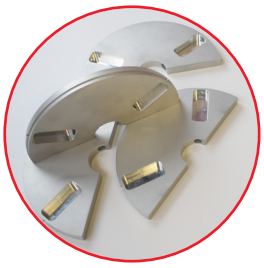

STANDARD ALUMINUM CLAMPING JAWS SCREW ON THE MACHINE

Water cooled

POWER SOURCE*

SAXX-201	SAXX-200	SAXX-210	SAXX-300
Orbital TIG welding power source 200A, 110 - 220v *with cooling system*	**Orbital TIG welding power source 200A, 110 - 220v** *with cooling system*	**Orbital TIG welding power source 210A, 110 - 220v**	**Orbital TIG welding power source 300A, 400v**

** A closed head multi brand compatible version (AMI) is also available—see the "Multi brand compatible orbital welding solutions" section in the brochure.*

TECHNICAL FEATURES

PART NO.	SATFX-170
DESCRIPTION	Closed welding head with 8m / 26ft cable **Water cooled**
TUBE DIAMETER	38 - 170 mm
	1.5" - 6.625"
ELECTRODE DIAMETER	1.6 or 2.4 mm
	1/16 or 3/32
WEIGHT WITH CABLE	14.5 kg
	31.97 lbs
DUTY CYCLE AT 100%	120 A
MAX WELDING CURRENT	150 A
OPERATING TEMPERATURE	+0°C / + 40 °C (32°F / 104°F)

DIMENSIONS (MM/INCH)

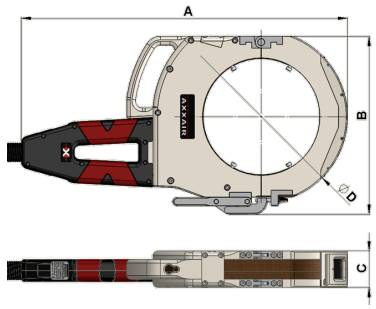

DIM	SATFX-170	
A	548 mm	21.57"
B	299 mm	11.77"
C	61.3 mm	2.41"
D	290 mm	11.41"

DELIVERY AND STORAGE

Delivered in a shockproof case
with a lead hook and a flap handling tool

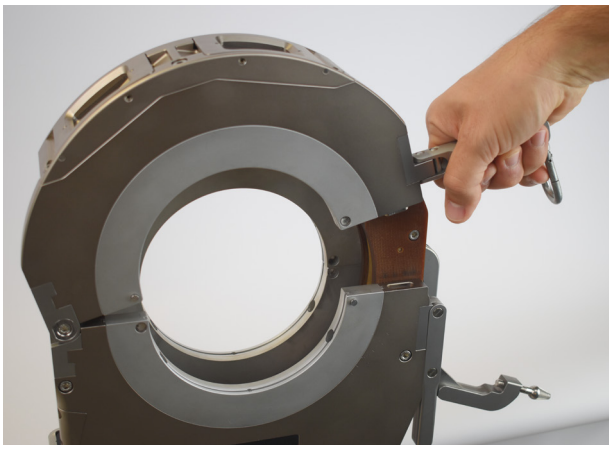

ACCESSORIES

CLAMPING JAWS

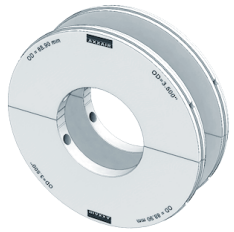

PART NO. SMN170-XX*

ADAPTATION SPACERS

PART NO. SMN170-ET115

ELBOW FLANGES

See Accessories & consumables for SATFX

TABLE MOUNTS

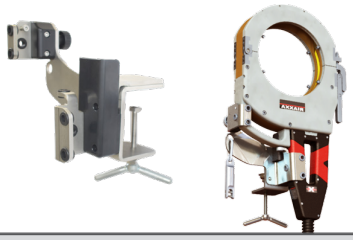

PART NO. SATFX-170-SUP

ELECTRODE HOLDERS

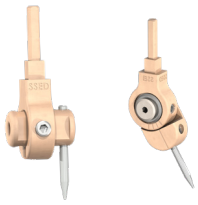

PART NO. SSEDX / SSEIX

LEAD EXTENSION

5 or 10 meters

PART NO. SAFS-05MX / SAFS-10MX

Other accessories are available on request depending on the configuration of the tubes to be welded.
Discover also all Pipe Purge Masters (PPM) accessories for purging solutions!
www.PURGEMASTERS.com

CONSUMABLES

ELECTRODES

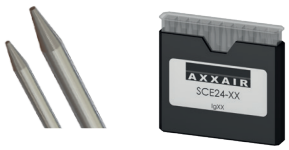

Diameter 1.6 or 2.4 mm / 1/16 or 3/32"

PART NO. SCE16-XX / SCE24-XX

* XX = OUTSIDE DIAMETER

ORBITAL WELDING

Accessories & consumables for closed heads

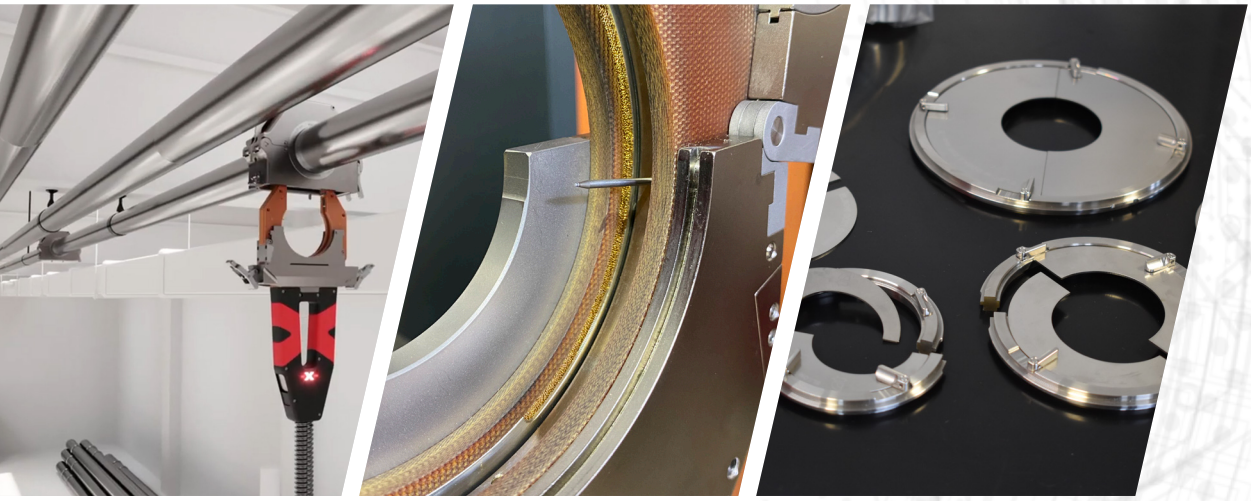

AXXAIR
AN SPG GROUP BRAND

CASSETTES FOR SATFX-52-76-115

These cassettes facilitate welding in tight and confined spaces where operating welding machines is challenging. Once the cassette is mounted on the tubes or accessories to be welded, the operator simply needs to secure the welding machine body into the cassette and initiate the welding program either from the power source or the welding head's keyboard.

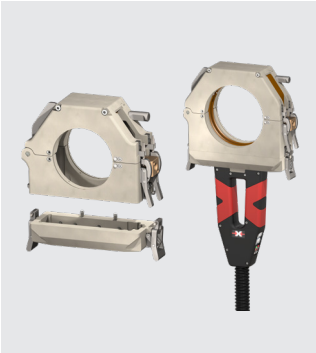

PART NO.	DESCRIPTION	WEIGHT		PACKAGING DIMENSIONS	
SATFX52-CA01	Cassette for SATFX-52	2.3 kg	5.07 lbs	30 x 30 x 15 cm	11.8 x 11.8 x 5.9"
SATFX76-CA01	Cassette for SATFX-76	2.7 kg	5.95 lbs	30 x 30 x 15 cm	11.8 x 11.8 x 5.9"
SATFX115-CA01	Cassette for SATFX-115	3.5 kg	7.71 lbs	30 x 30 x 15 cm	11.8 x 11.8 x 5.9"

DIMENSIONS (MM/INCH)

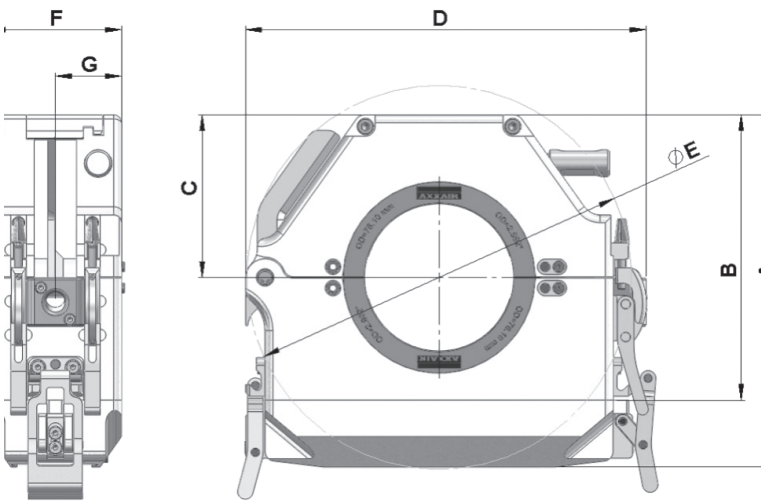

DIM	SATFX-52-CA01		SATFX-76-CA01		SATFX-115-CA01	
A	158 mm	6.22"	182 mm	7.16"	222.5 mm	8.76"
B	123.5 mm	4.86"	147.5 mm	5.80"	188 mm	7.40"
C	72 mm	2.83"	84 mm	3.31"	104 mm	4.09"
D	182.5 mm	7.18"	206.5 mm	8.13"	246.5 mm	9.70"
E	175 mm	6.89"	199 mm	7.83"	238 mm	9.37"
F	68.1 mm	2.68"	68.1 mm	2.68"	68.1 mm	2.68"
G	34.05 mm	1.34"	34.05 mm	1.34"	34.05 mm	1.34"

CLAMPING JAWS

Clamping jaws are machined to the outside diameter of the tube.

To order the jaws, replace **XXX** with the machine model number and **XX** with the outside diameter of the tube to be welded.

Example: using SATFX-52 weld head with a set of jaws for clamping a tube with an outside diameter of ø 38.10 mm = SMN052-38.10

Thin stainless steel jaws
(thickness 8 mm),
four half shells

Wide aluminium jaws
(thickness 22 mm),
two half shells

Standards jaws
aluminium
(thickness 14 mm),
four half shells *for SATFX-170*

FOR MACHINE	TYPE OF JAWS	PART NO.	WEIGHT	PACKAGING (PLASTIC)	
SATFX-52	Stainless steel thin jaws	SMN052-**XX**	Depending on the tube diameter	7.5 x 8 x 3 cm	2.9 x 3.1 x 1.2"
	Wide aluminium jaws	SML052-**XX**			
SATFX-76	Stainless steel thin jaws	SMN076-**XX**	Depending on the tube diameter	11 x 11.5 x 3 cm	4.3 x 4.5 x 1.2"
	Wide aluminium jaws	SML076-**XX**			
SATFX-115	Stainless steel thin jaws	SMN115-**XX**	Depending on the tube diameter	17 x 18 x 3 cm	6.7 x 7.1 x 1.2"
	Wide aluminium jaws	SML115-**XX**			
SATFX-170	Standard aluminium jaws	SMN170-**XX**	Depending on the tube diameter	20 x 20 x 4 cm	7.9 x 7.9 x 1.6"

ADAPTATION SPACERS

A set of spacers consists of **four half-shells** machined to the outside shape of the jaws concerned and allows for the use of lower capacity machine jaws.

Example: the spacer SMN115-ET76 can be used on jaws for the SATFX-76 onto a SATFX-115.

Adaptation spacers
for SATFX-76-115
stainless steel -
thickness 8 mm
four half shells

Adaptation spacers
for SATFX-170
aluminium -
thickness 14 mm
four half shells

FOR MACHINE	TYPE OF JAWS	PART NO.	WEIGHT		PACKAGING (PLASTIC)	
SATFX-52	-	-	-	-	-	-
SATFX-76	SATF-40NDHX	SMN076-ET40	0.5 kg	1.1 lbs	7.5 x 8 x 3 cm	2.9 x 3.1 x 1.2"
	SATFX-52	SMN076-ET52	0.4 kg	0.88 lbs	7.5 x 8 x 3 cm	2.9 x 3.1 x 1.2"
SATFX-115	SATF-40NDHX	SMN115-ET40	1.7 kg	3.7 lbs	7.5 x 8 x 3 cm	2.9 x 3.1 x 1.2"
	SATFX-52	SMN115-ET52	1.2 kg	4.4 lbs	7.5 x 8 x 3 cm	2.9 x 3.1 x 1.2"
	SATF-65NDHX	SMN115-ET65	1.0 kg	2.2 lbs	11 x 11.5 x 3 cm	4.3 x 4.5 x 1.2"
	SATFX-76	SMN115-ET76	0.9 kg	2 lbs	11 x 11.5 x 3 cm	4.3 x 4.5 x 1.2"
SATFX-170	SATFX-115	SMN170-ET115	1.130 kg	2.5 lbs	20 x 20 x 4 cm	7.9 x 7.9 x 1.6"

AXXAIR also offers adaptation spacers for jaws from other manufacturers.
For further information, please contact us.

ELBOW FLANGES

SCAN QR CODE TO WATCH VIDEO

The use of these elbow flanges ensures an optimized gas protection, eliminating the need for tape and post-weld cleaning of the elbow.
Welding elbow to tube with a closed head requires the following on the elbow end:

- **Specific elbow flange support jaws** (consisting of two half-shells) tailored for the SATFX weld head
- **Elbow flanges** (two half-shells) designed for each outer diameter and radius of the elbow to be welded
- **Offset electrode support** (SSEDX) depending on the configuration of the elbow to be welded (in the following product code table, the SSEDX column shows whether the accessory is needed or not)

On the tube end, it is recommended to use wide clamping jaws (two half shells) to ensure a better positioning of the closed head on the tube-elbow set-up to be welded and already tacked.

The elbow flanges rotate in order to give flexibility and to fit perfectly different configurations and welding positions.

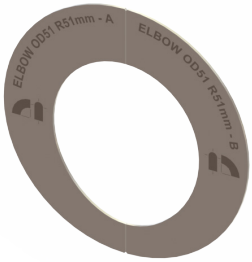

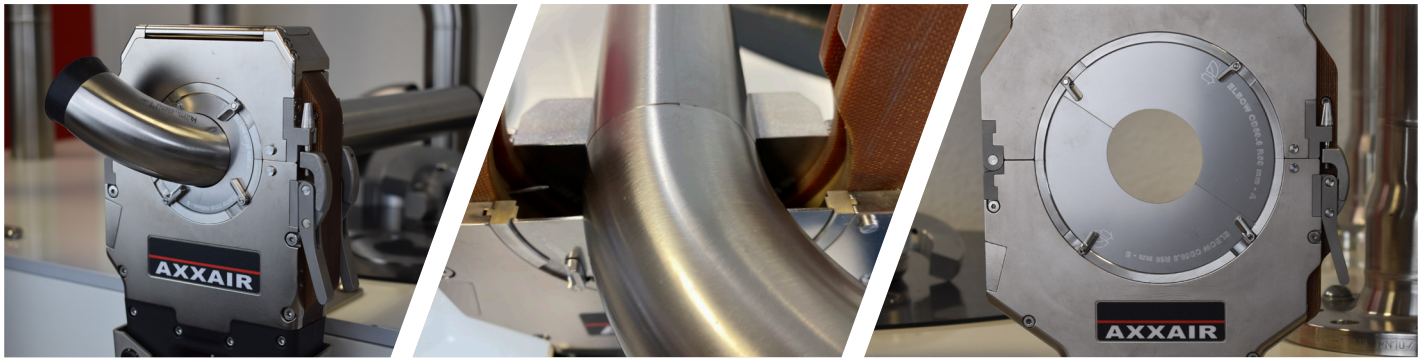

O/D (MM / INCH)		R (MM / INCH)		FLANGES FOR SATFX-52 PART NO.	FLANGES FOR SATFX-76 PART NO.	FLANGES FOR SATFX-115 PART NO.	WITH OFFSET ELECTRODE (SSEDX)
6	0.236	19	0.748	21AAA00-19A	31AAA00-19A	-	●
12	0.472	26	1.024	21ACI00-26A	31ACI00-26A	41ACI00-26A	●
12.7	0.5	19.05	0.750	21ACP00-19,05A	31ACP00-19,05A	41ACP00-19,05A	●
12.7	0.5	28.58	1.125	21ACP00-28,58A	31ACP00-28,58A	41ACP00-28,58A	●
12.7	0.5	304.8	12	21ACP00-304,8	31ACP00-304,8	41ACP00-304,8	-
13	0.512	26	1.024	21ACS00-26A	31ACS00-26A	41ACS00-26A	●
13.5	0.531	20	0.787	21ACX00-20A	31ACX00-20A	41ACX00-20A	●
13.5	0.531	21	0.827	21ACX00-21A	31ACX00-21A	41ACX00-21A	●
13.7	0.539	20	0.787	21ACZ00-20A	31ACZ00-20A	41ACZ00-20A	●
17.2	0.677	25	0.984	21AEI00-25A	31AEI00-25A	41AEI00-25A	●
17.2	0.677	30	1.181	21AEI00-30A	31AEI00-30A	41AEI00-30A	●
17.3	0.681	37,5	1.476	21AEJ00-37,5	31AEJ00-37,5	41AEJ00-37,5	-
18	0.709	23	0.906	21AEQ00-23A	31AEQ00-23A	41AEQ00-23A	●
18	0.709	27	1.063	21AEQ00-27A	31AEQ00-27A	41AEQ00-27A	●
18	0.709	35	1.378	21AEQ00-35	31AEQ00-35	41AEQ00-35	-
19	0.748	35	1.378	21AFA00-35	31AFA00-35	41AFA00-35	-

O/D (MM / INCH)		R (MM / INCH)		FLANGES FOR SATFX-52 PART NO.	FLANGES FOR SATFX-76 PART NO.	FLANGES FOR SATFX-115 PART NO.	WITH OFFSET ELECTRODE (SSEDX)
19.05	0.750	28.6	1.126	21AFA01-28,6A	31AFA01-28,6A	41AFA01-28,6A	●
19.05	0.750	304.8	12	21AFA01-304,8	31AFA01-304,8	41AFA01-304,8	-
20	0.787	26	1.024	21AFK00-26A	31AFK00-26A	41AFK00-26A	●
20	0.787	30	1.181	21AFK00-30A	31AFK00-30A	41AFK00-30A	●
21	0.827	25	0.984	21AFU00-25A	31AFU00-25A	41AFU00-25A	●
21.3	0.839	28	1.102	21AFX00-28A	31AFX00-28A	41AFX00-28A	●
21.3	0.839	27	1.063	21AFX00-27A	31AFX00-27A	41AFX00-27A	●
21.3	0.839	31.95	1.258	21AFX00-31,95A	31AFX00-31,95A	41AFX00-31,95A	●
21.3	0.839	38	1.496	21AFX00-38	31AFX00-38	41AFX00-38	-
21.3	0.839	38.1	1.5	21AFX00-38,1	31AFX00-38,1	41AFX00-38,1	-
21.3	0.839	45	1.772	21AFX00-45	31AFX00-45	41AFX00-45	-
21.7	0.854	38.1	1.5	21AGB00-38,1	31AGB00-38,1	41AGB00-38,1	-
22	0.866	40	1.575	21AGE00-40	31AGE00-40	41AGE00-40	-
23	0.906	26	1.024	21AGO00-26A	31AGO00-26A	41AGO00-26A	●
23	0.906	30	1.181	21AGO00-30A	31AGO00-30A	41AGO00-30A	●
23	0.906	34.5	1.358	21AGO00-34,5	31AGO00-34,5	41AGO00-34,5	-
23	0.906	40	1.575	21AGO00-40	31AGO00-40	41AGO00-40	-
23	0.906	60	2.362	21AGO00-60	31AGO00-60	41AGO00-60	-
25	0.984	30	1.181	21AHI00-30A	31AHI00-30A	41AHI00-30A	●
25	0.984	33	1.299	21AHI00-33A	31AHI00-33A	41AHI00-33A	●
25	0.984	37	1.457	21AHI00-37	31AHI00-37	41AHI00-37	-
25	0.984	37.5	1.476	21AHI00-37,5	31AHI00-37,5	41AHI00-37,5	-
25	0.984	38	1.496	21AHI00-38	31AHI00-38	41AHI00-38	-
25	0.984	38.1	1.5	21AHI00-38,1	31AHI00-38,1	41AHI00-38,1	-
25	0.984	65	2.559	21AHI00-65	31AHI00-65	41AHI00-65	-
25.4	1	27.5	1.083	21AHM00-27,5A	31AHM00-27,5A	41AHM00-27,5A	●
25.4	1	35	1.378	21AHM00-35A	31AHM00-35A	41AHM00-35A	●
25.4	1	38.1	1.5	21AHM00-38,1	31AHM00-38,1	41AHM00-38,1	-
25.4	1	52.37	2.062	21AHM00-52,37	31AHM00-52,37	41AHM00-52,37	-
25.4	1	304.8	12	21AHM00-304,8	31AHM00-304,8	41AHM00-304,8	-
25.4	1	609.6	24	21AHM00-609,6	31AHM00-609,6	41AHM00-609,6	-
26	1.024	30	1.181	21AHS00-30A	31AHS00-30A	41AHS00-30A	●
26.7	1.051	28	1.102	21AHZ00-28A	31AHZ00-28A	41AHZ00-28A	●
26.7	1.051	28.6	1.126	21AHZ00-28,6A	31AHZ00-28,6A	41AHZ00-28,6A	●
26.7	1.051	38	1.496	21AHZ00-38	31AHZ00-38	41AHZ00-38	-
26.7	1.051	38.1	1.5	21AHZ00-38,1	31AHZ00-38,1	41AHZ00-38,1	-
26.9	1.059	28	1.102	21AIB00-28A	31AIB00-28A	41AIB00-28A	●
26.9	1.059	28.5	1.122	21AIB00-28,5A	31AIB00-28,5A	41AIB00-28,5A	●
26.9	1.059	29	1.142	21AIB00-29A	31AIB00-29A	41AIB00-29A	●
26.9	1.059	40.35	1.589	21AIB00-40,35	31AIB00-40,35	41AIB00-40,35	-
26.9	1.059	57	2.244	21AIB00-57	31AIB00-57	41AIB00-57	-
27.2	1.071	28.6	1.126	21AIE00-28,6A	31AIE00-28,6A	41AIE00-28,6A	●
27.2	1.071	38.1	1.5	21AIE00-38,1	31AIE00-38,1	41AIE00-38,1	-
28	1.102	31.8	1.252	21AIM00-31,8A	31AIM00-31,8A	41AIM00-31,8A	●
28	1.102	37	1.457	21AIM00-37	31AIM00-37	41AIM00-37	-
28	1.102	42	1.654	21AIM00-42	31AIM00-42	41AIM00-42	-
28	1.102	50	1.969	21AIM00-50	31AIM00-50	41AIM00-50	-
28	1.102	80	3.150	21AIM00-80	31AIM00-80	41AIM00-80	-

O/D (MM / INCH)		R (MM / INCH)		FLANGES FOR SATFX-52 PART NO.	FLANGES FOR SATFX-76 PART NO.	FLANGES FOR SATFX-115 PART NO.	WITH OFFSET ELECTRODE (SSEDX)
29	1.142	50	1.969	21AIW00-50	31AIW00-50	41AIW00-50	-
30	1.181	33.5	1.319	21AJG00-33,5A	31AJG00-33,5A	41AJG00-33,5A	●
30	1.181	38	1.496	21AJG00-38	31AJG00-38	41AJG00-38	-
30	1.181	45	1.772	21AJG00-45	31AJG00-45	41AJG00-45	-
31.75	1.250	47.63	1.875	21AJX01-47,63	31AJX01-47,63	41AJX01-47,63	-
32	1.260	35	1.378	21AKA00-35A	31AKA00-35A	41AKA00-35A	●
32	1.260	43	1.693	21AKA00-43	31AKA00-43	41AKA00-43	-
32	1,260	48	1.890	21AKA00-48	31AKA00-48	41AKA00-48	-
33	1.299	45	1.772	21AKK00-45	31AKK00-45	41AKK00-45	-
33	1.299	49.5	1.949	21AKK00-49,5	31AKK00-49,5	41AKK00-49,5	-
33	1.299	90	3.543	21AKK00-90	31AKK00-90	41AKK00-90	-
33.4	1.315	25.4	1	-	-	-	-
33.4	1.315	38.1	1.5	21AKO00-38,1A	31AKO00-38,1A	41AKO00-38,1A	●
33.4	1.315	38	1.496	21AKO00-38A	31AKO00-38A	41AKO00-38A	●
33.7	1.327	38	1.496	21AKR00-38A	31AKR00-38A	41AKR00-38A	●
33.7	1.327	50.55	1.990	21AKR00-50,55	31AKR00-50,55	41AKR00-50,55	-
33.7	1.327	72	2.835	21AKR00-72	31AKR00-72	41AKR00-72	-
34	1.339	38.1	1.5	21AKU00-38,1A	31AKU00-38,1A	41AKU00-38,1A	●
34	1.339	51	2.008	21AKU00-51	31AKU00-51	41AKU00-51	-
34	1.339	55	2.165	21AKU00-55	31AKU00-55	41AKU00-55	-
35	1.378	50	1.969	21ALE00-50	31ALE00-50	41ALE00-50	-
35	1.378	52,5	2.067	21ALE00-52,5	31ALE00-52,5	41ALE00-52,5	-
35	1.378	55	2.165	21ALE00-55	31ALE00-55	41ALE00-55	-
38	1.496	45	1.772	21AMI00-45	31AMI00-45	41AMI00-45	-
38	1.496	52	2.047	21AMI00-52	31AMI00-52	41AMI00-52	-
38	1.496	56	2.205	21AMI00-56	31AMI00-56	41AMI00-56	-
38	1.496	57	2.244	21AMI00-57	31AMI00-57	41AMI00-57	-
38	1.496	57.2	2.252	21AMI00-57,2	31AMI00-57,2	41AMI00-57,2	-
38	1.496	105	4.134	21AMI00-105	31AMI00-105	41AMI00-105	-
38.1	1.5	45	1.772	21AMJ00-45	31AMJ00-45	41AMJ00-45	-
38.1	1.5	50	1.969	21AMJ00-50	31AMJ00-50	41AMJ00-50	-
38.1	1.5	57.2	2.52	21AMJ00-57,2	31AMJ00-57,2	41AMJ00-57,2	-
38.1	1,5	57.3	2.256	21AMJ00-57,3	31AMJ00-57,3	41AMJ00-57,3	-
38.1	1.5	74.6	2.937	21AMJ00-74,6	31AMJ00-74,6	41AMJ00-74,6	-
38.1	1.5	304.8	12	21AMJ00-304,8	31AMJ00-304,8	41AMJ00-304,8	-
38.1	1.5	457.2	18	21AMJ00-457,2	31AMJ00-457,2	41AMJ00-457,2	-
38.1	1.5	609.6	24	21AMJ00-609,6	31AMJ00-609,6	41AMJ00-609,6	-
38.1	1.5	914.4	36	21AMJ00-914,4	31AMJ00-914,4	41AMJ00-914,4	-
40	1.575	60	2.362	21ANC00-60	31ANC00-60	41ANC00-60	-
41	1.614	60	2.362	21ANM00-60	31ANM00-60	41ANM00-60	-
42.1	1.657	31.8	1.252	-	-	-	-
42.2	1.661	31.8	1.252	-	-	-	-
42.2	1.661	47	1.850	21ANY00-47	31ANY00-47	41ANY00-47	-
42.2	1,661	47.6	1.874	21ANY00-47,6	31ANY00-47,6	41ANY00-47,6	-
42.4	1,669	47	1.850	21AOA00-47	31AOA00-47	41AOA00-47	-
42.4	1.669	47.6	1.874	21AOA00-47,6	31AOA00-47,6	41AOA00-47,6	-
42.4	1.669	48	1.890	21AOA00-48	31AOA00-48	41AOA00-48	-
42.4	1.669	63.6	2.504	21AOA00-63,6	31AOA00-63,6	41AOA00-63,6	-

O/D (MM / INCH)		R (MM / INCH)		FLANGES FOR SATFX-52 PART NO.	FLANGES FOR SATFX-76 PART NO.	FLANGES FOR SATFX-115 PART NO.	WITH OFFSET ELECTRODE (SSEDX)
42.4	1.669	93	3.661	21AOA00-93	31AOA00-93	41AOA00-93	-
43	1.693	64.5	2.539	21AOG00-64,5	31AOG00-64,5	41AOG00-64,5	-
43	1.693	70	2.756	21AOG00-70	31AOG00-70	41AOG00-70	-
43	1.693	120	4.724	21AOG00-120	31AOG00-120	41AOG00-120	-
44.5	1.752	51	2.008	21AOV00-51	31AOV00-51	41AOV00-51	-
44.5	1.752	64.5	2.539	21AOV00-64,5	31AOV00-64,5	41AOV00-64,5	-
44.5	1.752	66	2.598	21AOV00-66	31AOV00-66	41AOV00-66	-
44.5	1.752	120	4.724	21AOV00-120	31AOV00-120	41AOV00-120	-
48.1	1.894	38.1	1.5	21AQF00-38,1A	31AQF00-38,1A	41AQF00-38,1A	●
48.3	1.902	38.1	1.5	21AQH00-38,1A	31AQH00-38,1A	41AQH00-38,1A	●
48.3	1.902	57	2.244	21AQH00-57	31AQH00-57	41AQH00-57	-
48.3	1.902	57.1	2.248	21AQH00-57,1	31AQH00-57,1	41AQH00-57,1	-
48.3	1.902	57.2	2.252	21AQH00-57,2	31AQH00-57,2	41AQH00-57,2	-
48.3	1.902	64.15	2.526	21AQH00-64,15	31AQH00-64,15	41AQH00-64,15	-
48.3	1.902	72.45	2.852	21AQH00-72,45	31AQH00-72,45	41AQH00-72,45	-
48.3	1.902	108	4.252	21AQH00-108	31AQH00-108	41AQH00-108	-
48.6	1.913	57.2	2.252	21AQK00-57,2	31AQK00-57,2	41AQK00-57,2	-
50	1.969	75	2.953	21AQY00-75	31AQY00-75	41AQY00-75	-
50.8	2	60	2.362	21ARG00-60	31ARG00-60	41ARG00-60	-
50.8	2	67.5	2.657	21ARG00-67,5	31ARG00-67,5	41ARG00-67,5	-
50.8	2	76.2	3	21ARG00-76,2	31ARG00-76,2	41ARG00-76,2	-
50.8	2	103.17	4.062	21ARG00-103,17	31ARG00-103,17	41ARG00-103,17	-
50.8	2	304.8	12	21ARG00-304,8	31ARG00-304,8	41ARG00-304,8	-
50.8	2	457.2	18	21ARG00-457,2	31ARG00-457,2	41ARG00-457,2	-
50.8	2	609.6	24	21ARG00-609,6	31ARG00-609,6	41ARG00-609,6	-
50.8	2	914.4	36	21ARG00-914,4	31ARG00-914,4	41ARG00-914,4	-
50.8	2	1,219.2	48	21ARG00-1219,2	31ARG00-1219,2	41ARG00-1219,2	-
51	2.008	51	2.008	-	31ARI00-51	41ARI00-51	-
51	2.008	67.5	2.657	21ARI00-67,5	31ARI00-67,5	41ARI00-67,5	-
51	2.008	75	2.953	21ARI00-75	31ARI00-75	41ARI00-75	-
51	2.008	76	2.992	21ARI00-76	31ARI00-76	41ARI00-76	-
51	2.008	76.2	3	21ARI00-76,2	31ARI00-76,2	41ARI00-76,2	-
51	2.008	76.5	3.012	21ARI00-76,5	31ARI00-76,5	41ARI00-76,5	-
52	2.047	69	2.717	21ARS00-69	31ARS00-69	41ARS00-69	-
52	2.047	70	2.756	21ARS00-70	31ARS00-70	41ARS00-70	-
52	2.047	75	2.953	21ARS00-75	31ARS00-75	41ARS00-75	-
52	2.047	78	3.071	21ARS00-78	31ARS00-78	41ARS00-778	-
53	2.087	70	2.756	-	31ASC00-70	41ASC00-70	-
53	2.087	75	2.953	-	31ASC00-75	41ASC00-75	-
53	2.087	79.5	3.130	-	31ASC00-79,5	41ASC00-79,5	-
53	2.087	150	5.906	-	31ASC00-150	41ASC00-150	-
54	2.126	54	2.126	-	31ASM00-54	41ASM00-54	-
54	2.126	68.5	2.697	-	31ASM00-68,5	41ASM00-68,5	-
54	2.126	70	2.756	-	31ASM00-70	41ASM00-70	-
54	2.126	75	2.953	-	31ASM00-75	41ASM00-75	-
54	2.126	150	5.906	-	31ASM00-150	41ASM00-150	-
56	2.205	77	3.031	-	31ATG00-77	41ATG00-77	-
60.3	2.374	50.8	2	-	31AUX00-50,8A	41AUX00-50,8A	●

O/D (MM / INCH)		R (MM / INCH)		FLANGES FOR SATFX-52 PART NO.	FLANGES FOR SATFX-76 PART NO.	FLANGES FOR SATFX-115 PART NO.	WITH OFFSET ELECTRODE (SSEDX)
60.3	2.374	76	2.992	-	31AUX00-76	41AUX00-76	-
60.3	2.374	76.1	2.996	-	31AUX00-76,1	41AUX00-76,1	-
60.3	2.374	76.2	3	-	31AUX00-76,2	41AUX00-76,2	-
60.3	2.374	80	3.150	-	31AUX00-80	41AUX00-80	-
60.3	2.374	90.45	3.561	-	31AUX00-90,45	41AUX00-90,45	-
60.3	2.374	135	5.315	-	31AUX00-135	41AUX00-135	-
63	2.480	95	3.740	-	31AVY00-95	41AVY00-95	-
63.5	2.5	82.5	3.248	-	31AWD00-82,5	41AWD00-82,5	-
63.5	2.5	90	3.543	-	31AWD00-90	41AWD00-90	-
63.5	2.5	94.5	3.720	-	31AWD00-94,5	41AWD00-94,5	-
63.5	2.5	95.25	3.750	-	31AWD00-95,25	41AWD00-95,25	-
63.5	2.5	131.75	5.187	-	31AWD00-131,75	41AWD00-131,75	-
63.5	2.5	304.8	12	-	31AWD00-304,8	41AWD00-304,8	-
63.5	2.5	457.2	18	-	31AWD00-457,2	41AWD00-457,2	-
63.5	2.5	609.6	24	-	31AWD00-609,6	41AWD00-609,6	-
63.5	2.5	914.4	36	-	31AWD00-914,4	41AWD00-914,4	-
64	2.520	180	7.087	-	31AWI00-180	41AWI00-180	-
70	2.756	80	3.150	-	31AYQ00-80	41AYQ00-80	-
70	2.756	92	3.622	-	31AYQ00-92	41AYQ00-92	-
70	2.756	95	3.740	-	31AYQ00-95	41AYQ00-95	-
70	2.756	97.5	3.839	-	31AYQ00-97,5	41AYQ00-97,5	-
70	2.756	105	4.134	-	31AYQ00-105	41AYQ00-105	-
70	2.756	130	5.118	-	31AYQ00-130	41AYQ00-130	-
71	2.795	97.5	3.839	-	31AZA00-97,5	41AZA00-97,5	-
73	2.874	63.5	2.5	-	31AZU00-63,5	41AZU00-63,5	-
73	2.874	95	3.740	-	31AZU00-95	41AZU00-95	-
73	2.874	95.3	3.752	-	31AZU00-95,3	41AZU00-95,3	-
73	2.874	109.5	4.311	-	31AZU00-109,5	41AZU00-109,5	-
74	2.913	140	5.512	-	31BAE00-140	41BAE00-140	-
76	2.992	114	4.488	-	31BAY00-114	41BAY00-114	-
76.1	2.996	95	3.740	-	31BAZ00-95	41BAZ00-95	-
76.1	2.996	96	3.780	-	31BAZ00-96	41BAZ00-96	-
76.1	2.996	114	4.488	-	31BAZ00-114	41BAZ00-114	-
76.1	2.996	114.15	4.494	-	31BAZ00-114,15	41BAZ00-114,15	-
76.1	2.996	175	6.890	-	31BAZ00-175	41BAZ00-175	-
76.2	3	114.3	4.5	-	31BBA00-114,3	41BBA00-114,3	-
76.2	3	160.32	6.312	-	31BBA00-160,32	41BBA00-160,32	-
76.2	3	304.8	12	-	31BBA00-304,8	41BBA00-304,8	-
76.2	3	457.2	18	-	31BBA00-457,2	41BBA00-457,2	-
76.2	3	609.6	24	-	31BBA00-609,6	41BBA00-609,6	-
76.2	3	914.4	36	-	31BBA00-914,4	41BBA00-914,4	-
76.2	3	1,219.2	48	-	31BBA00-1219,2	41BBA00-1219,2	-
76.3	3.004	82	3.228	-	31BBB00-82	41BBB00-82	-
84	3.307	120	4.724	-	-	41BEA00-120	-
84	3.307	126	4.961	-	-	41BEA00-126	-
84	3.307	160	6.299	-	-	41BEA00-160	-
85	3.346	90	3.543	-	-	41BEK00-90	-
86	3.386	126	4.961	-	-	41BEU00-126	-

O/D (MM / INCH)		R (MM / INCH)		FLANGES FOR SATFX-52 PART NO.	FLANGES FOR SATFX-76 PART NO.	FLANGES FOR SATFX-115 PART NO.	WITH OFFSET ELECTRODE (SSEDX)
88.9	3.5	76.2	3	-	-	41BFX00-76,2	-
88.9	3.5	114	4.488	-	-	41BFX00-114	-
88.9	3.5	114.3	4.5	-	-	41BFX00-114,3	-
88.9	3.5	114.5	4.508	-	-	41BFX00-114,5	-
88.9	3.5	205	8.071	-	-	41BFX00-205	-
101.6	4	88.9	3.5	-	-	41BKU00-88,9	-
101.6	4	110	4.331	-	-	41BKU00-110	-
101.6	4	133	5.236	-	-	41BKU00-133	-
101.6	4	133.4	5.252	-	-	41BKU00-133,4	-
101.6	4	133.5	5.256	-	-	41BKU00-133,5	-
101.6	4	134.5	5.295	-	-	41BKU00-134,5	-
101.6	4	150	5.906	-	-	41BKU00-150	-
101.6	4	152	5.984	-	-	41BKU00-152	-
101.6	4	152.4	6	-	-	41BKU00-152,4	-
101.6	4	211.12	8.312	-	-	41BKU00-211,12	-
101.6	4	304.8	12	-	-	41BKU00-304,8	-
101.6	4	457.2	18	-	-	41BKU00-457,2	-
101.6	4	609.6	24	-	-	41BKU00-609,6	-
101.6	4	914.4	36	-	-	41BKU00-914,4	-
101.6	4	1,219.2	48	-	-	41BKU00-1219,2	-
104	4.094	100	3.937	-	-	41BLS00-100	-
104	4.094	110	4.331	-	-	41BLS00-110	-
104	4.094	140	5.512	-	-	41BLS00-140	-
104	4.094	150	5.906	-	-	41BLS00-150	-
104	4.094	152	5.984	-	-	41BLS00-152	-
104	4.094	200	7.874	-	-	41BLS00-200	-
106	4.173	150	5.906	-	-	41BMM00-150	-
108	4.252	142.5	5.610	-	-	41BNG00-142,5	-
114.3	4.5	101.6	4.000	-	-	41BPR00-101,6	-
114.3	4.5	152	5.984	-	-	41BPR00-152	-
114.3	4.5	152.4	6	-	-	41BPR00-152,4	-
114.3	4.5	152.5	6.004	-	-	41BPR00-152,5	-
114.3	4.5	270	10.630	-	-	41BPR00-270	-

FOR SATFX-170

Please contact us.

ELBOW FLANGE SUPPORT

FOR MACHINE	PART NO.	WEIGHT		PACKAGING (PLASTIC)		PICTURE
SATFX-52	SMN052-SFLAX	0.088 kg	0.19 lbs	10 x 10 x 2.5 cm	3.94 x 3.94 x 0.98"	two half shells, stainless steel, thickness 10.6 mm / 0.417"
SATFX-76	SMN076-SFLAX	0.118 kg	0.26 lbs	12.5 x 12.5 x 2.5 cm	4.92 x 4.92 x 0.98"	
SATFX-115	SMN115-SFLAX	0.168 kg	0.37 lbs	16 x 16 x 2.5 cm	6.3 x 6.3 x 0.98"	
SATFX-170	SMN170-SFLAX	0.495 kg	1.09 lbs	20 x 20 x 4 cm	7.87 x 7.87 x 1.57"	

ELECTRODE HOLDERS

OFFSET ELECTRODE HOLDER

for diameter 1.6 mm / 1/16" and diameter 2.4 mm / 3/32" electrodes

The SSEDX accessory allows a lateral offset of 2 - 6.5 mm (0.078 - 0.256") from the original position of the electrode, allowing to weld short elbows for example.

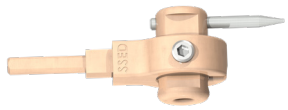

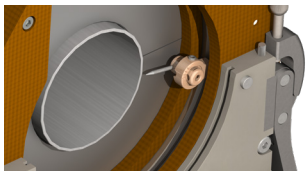

PART NO.	DESCRIPTION	WEIGHT		DIMENSIONS	
SSEDX	Offset electrode support	0.008 kg	0.018 lbs	150 x 210 mm	5.9 x 8.3"
See consumables to find the electrodes required for its use.					

MACHINE	O/D WITHOUT HOLDER	O/D WITH HOLDER	
SATFX-52	6 - 52 mm / 0.25 - 2"	6 - 43mm / 0.25 - 1.69"	**The use of the offset holder reduces the diameter range of the welding head**
SATFX-76	6 - 77 m / 0.25 - 3"	6 - 67 mm / 0.25 - 2.64"	
SATFX-115	12 - 115 mm / 0.5 - 4.5"	12 - 107 mm / 0.5 - 4.21"	
SATFX-170	38 - 170 mm / 1.5 - 6.625"	38 - 161.3 mm / 1.5 - 6.35"	

INCLINED ELECTRODE HOLDER

for diameter 1.6 mm / 1/16" and diameter 2.4 mm / 3/32" electrodes

The SSEIX accessory allows the electrode to be angled from 0° to 45°, which makes it possible to produce angle welds (flange welds or other accessories).

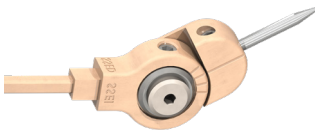

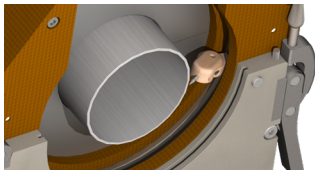

PART NO.	DESCRIPTION	WEIGHT		DIMENSIONS	
SSEIX	Inclined electrode support	0.015 kg	0.033 lbs	150 x 210 mm	5.9 x 8.3"
See consumables to find the electrodes required for its use.					

MACHINE	O/D WITHOUT HOLDER	O/D WITH HOLDER	
SATFX-52	6-52 mm / 0.25 - 2"	6 - 28 mm / 0.25 - 1.1"	**The use of the inclined holder reduces the diameter range of the welding head**
SATFX-76	6-77 mm / 0.25 - 3"	6 - 52 mm / 0.25 - 2"	
SATFX-115	12-115 mm / 0.5 - 4.5"	12 - 92 mm / 0.5 - 3.62"	
SATFX-170	38 - 170 mm / 1.5 - 6.625"	38 - 146 mm / 1.5 - 5.748"	

TABLE MOUNTS

This modular mounting system allows the installation of the machine on all possible types of support (workbench, barrier, etc.).

PART NO.	DESCRIPTION	WEIGHT		PACKAGING DIMENSIONS	
SATFX-SUP	Table mount for SATFX-52-76-115	1.39 kg	3.06 lbs	20 x 14 x 14 cm	7.9 x 5.5 x 5.5"
SATFX-170-SUP	Table mount for SATFX-170	2.75 kg	6.06 lbs	30 x 20 x 17 cm	11.8 x 7.9 x 6.7"

FOR SATFX-52-76-115

FOR SATFX-170

PURGING KITS (FOR SATFX-52-76-115 ONLY)

GAS PLUG PURGING KIT

Facilitates and accelerates inerting. Avoids the use of adhesive paper.

Consisting of: 10 sets of perforated plugs, 1 gas inlet connector,
1 hose Ø ⅝ length 5 metres, 1¼ turn gas valve

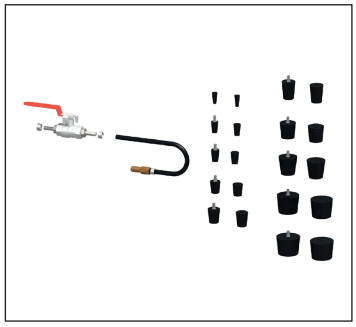

PART NO.	DESCRIPTION	WEIGHT		PACKAGING DIMENSIONS	
SKIB-01	Gas plug purging kit for tubes or Ø 6 to 41 mm	1.7 kg	3.75 lbs	35 x 30 x 9.5 cm	13.8 x 11.8 x 3.7"

GAS MEMBRANE PURGING KIT

Inerting tubes in the area to be welded before and during welding minimises gas consumption.

Consisting of: 9 sets of membranes with washers, 1 gas hose 6 m,
1 metal cable, 1¼ turn gas valve, 1 carabiner

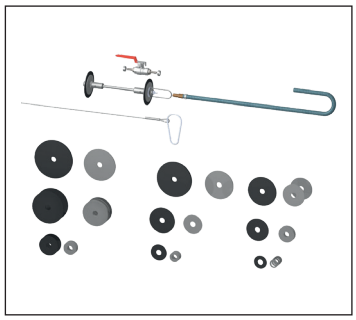

PART NO.	DESCRIPTION	WEIGHT		PACKAGING DIMENSIONS	
SKIF-01	Gas membrane purging kit for tubes Ø 40 to 120 mm	4.5 kg	9.92 lbs	35 x 30 x 9.5 cm	13.8 x 11.8 x 3.4"

PPM PIPE PURGE MASTERS

Please refer to the Pipe Purge Masters (PPM) brochure for more purging solutions.
www.PURGEMASTERS.com

To increase the operating distance between the weld head and the SAXX power source, cable extensions are available. It is strongly advised to use maximum one extension lead per weld head.

Please contact us if your required lenght exceeds this maximum.

PART NO.	DESCRIPTION	WEIGHT		PACKAGING DIMENSIONS	
SAFS-05MX	5m / 16.4ft extension cable Water cooling - without wire	7 kg	15.4 lbs	40 x 59 x 25 cm	15.7 x 23.2 x 9.8"
SAFS-10MX	10m / 32.8ft extension cable Water cooling - without wire	14 kg	30.9 lbs	40 x 59 x 25 cm	15.7 x 23.2 x 9.8"

ELECTRODES

AXXAIR's electrodes are specifically sharpened to 20° with a flat tip to increase their lifetime.

Pre-cut electrodes are available to cover the entire range of the head without damaging the rotary system.

The electrode must be selected according to the outer diameter of the tube to be welded.

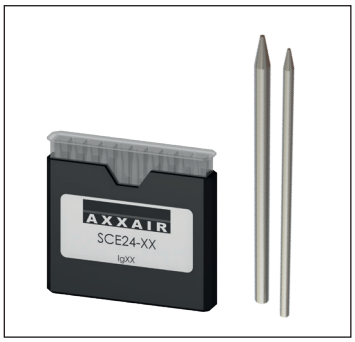

FOR SATFX-52

TUBE O/D (MIN - MAX) (MM / INCH)		ELECTRODE DIAMETER 1.6 MM (1/16") PART NO.	ELECTRODE DIAMETER 2.4 MM (3/32") PART NO.	ELECTRODE LENGTH (MM / INCH)	
6 - 11.5	0.236 - 0.453"	SCE16-48	SCE24-48	48.0	1.890"
11.5 - 18.5	0.453 - 0.728"	SCE16-44.5	SCE24-44.5	44.5	1.752"
18.5 - 25.5	0.728 - 1.004"	SCE16-41	SCE24-41	41.0	1.614"
25.5 - 32.5	1.004 -1.280"	SCE16-37.5	SCE24-37.5	37.5	1.476"
32.5 - 39.5	1.280 - 1.555"	SCE16-34	SCE24-34	34.0	1.339"
39.5 - 46.5	1.555 - 1.831"	SCE16-30.5	SCE24-30.5	30.5	1.201"
46.5 - 52	1.831 - 2.047"	SCE16-27	SCE24-27	27.0	1.063"

FOR SATFX-76

TUBE O/D (MIN - MAX) (MM / INCH)		ELECTRODE DIAMETER 1.6 MM (1/16") PART NO.	ELECTRODE DIAMETER 2.4 MM (3/32") PART NO.	ELECTRODE LENGTH (MM / INCH)	
6 - 7.5	0.236 - 0.295"	SCE16-62	SCE24-62	62.0	2.441"
7.5 - 14.5	0.295 - 0.571"	SCE16-58.5	SCE24-58.5	58.5	2.303"
14.5 - 21.5	0.571 - 0.846"	SCE16-55	SCE24-55	55.0	2.165"
21.5 - 28.5	0.846 - 1.122"	SCE16-51.5	SCE24-51.5	51.5	2.028"
28.5 - 35.5	1.122 - 1.398"	SCE16-48	SCE24-48	48.0	1.890"
35.5 - 42.5	1.398 - 1.673"	SCE16-44.5	SCE24-44.5	44.5	1.752"
42.5 - 49.5	1.673 - 1.949"	SCE16-41	SCE24-41	41.0	1.614"
49.5 - 56.5	1.949 - 2.224"	SCE16-37.5	SCE24-37.5	37.5	1.476"
56.5 - 63.5	2.224 - 2.500"	SCE16-34	SCE24-34	34.0	1.339"
63.5 - 70.5	2.500 - 2.776"	SCE16-30.5	SCE24-30.5	30.5	1.201"
70.5 -77	2.776 - 3.031"	SCE16-27	SCE24-27	27.0	1.063"

FOR SATFX-115

TUBE O/D (MIN - MAX) (MM / INCH)		ELECTRODE DIAMETER 1.6 MM (1/16") PART NO.	ELECTRODE DIAMETER 2.4 MM (3/32") PART NO.	ELECTRODE LENGTH (MM / INCH)	
12 - 19.5	0.472 - 0.768"	SCE16-76	SCE24-76	76.0	2.992"
19.5 - 26.5	0.768 - 1.043"	SCE16-72.5	SCE24-72.5	72.5	2.854"
26.5 - 33.5	1.043 - 1.319"	SCE16-69	SCE24-69	69.0	2.717"
33.5 - 40.5	1.319 - 1.594"	SCE16-65.5	SCE24-65.5	65.5	2.579"
40.5 - 47.5	1.594 - 1.870"	SCE16-62	SCE24-62	62.0	2.441"
47.5 - 54.5	1.870 - 2.146"	SCE16-58.5	SCE24-58.5	58.5	2.303"
54.5 - 61.5	2.146 - 2.421"	SCE16-55	SCE24-55	55.0	2.165"
61.5 - 68.5	2.421 - 2.697"	SCE16-51.5	SCE24-51.5	51.5	2.028"
68.5 - 75.5	2.697 - 2.972"	SCE16-48	SCE24-48	48.0	1.890"
75.5 - 82.5	2.972 - 3.248"	SCE16-44.5	SCE24-44.5	44.5	1.752"
82.5 - 89.5	3.248 - 3.524"	SCE16-41	SCE24-41	41.0	1.614"
89.5 - 96.5	3.524 - 3.799"	SCE16-37.5	SCE24-37.5	37.5	1.476"
96.5 - 103.5	3.799 - 4.075"	SCE16-34	SCE24-34	34.0	1.339"
103.5 - 110.5	4.075 - 4.350"	SCE16-30.5	SCE24-30.5	30.5	1.201"
110.5 - 115	4.350 - 4.528"	SCE16-27	SCE24-27	27.0	1.063"

FOR SATFX-170

TUBE O/D (MIN - MAX) (MM / INCH)		ELECTRODE DIAMETER 1.6 MM (1/16") PART NO.	ELECTRODE DIAMETER 2.4 MM (3/32") PART NO.	ELECTRODE LENGTH (MM / INCH)	
38 - 45	1.496 - 1.772"	SCE16-93.5	SCE24-93.5	93.5	3.681"
45 - 52	1.772 - 2.047"	SCE16-90	SCE24-90	90	3.543"
52 - 59	2.047 - 2.323"	SCE16-86.5	SCE24-86.5	86.5	3.406"
59 - 66	2.323 - 2.598"	SCE16-83	SCE24-83	83	3.268"
66 - 73	2.598 - 2.874"	SCE16-79.5	SCE24-79.5	79.5	3.130"
73 - 80	2.874 - 3.150"	SCE16-76	SCE24-76	76	2.992"
80 - 87	3.150 - 3.425"	SCE16-72.5	SCE24-72.5	72.5	2.854"
87 - 94	3.425 - 3.701"	SCE16-69	SCE24-69	69	2.717"
94 - 101	3.701 - 3.976"	SCE16-65.5	SCE24-65.5	65.5	2.579"
101 - 108	3.976 - 4.252"	SCE16-62	SCE24-62	62	2.441"
108 - 115	4.252 - 4.528"	SCE16-58.5	SCE24-58.5	58.5	2.303"
115 - 122	4.528 - 4.803"	SCE16-55	SCE24-55	55.0	2.165"
122 - 129	4.803 - 5.079"	SCE16-51.5	SCE24-51.5	51.5	2.028"
129 - 136	5.079 - 5.354"	SCE16-48	SCE24-48	48.0	1.890"
136 - 143	5.354 - 5.630"	SCE16-44.5	SCE24-44.5	44.5	1.752"
143 - 150	5.630 - 5.906"	SCE16-41	SCE24-41	41.0	1.614"
150 - 157	5.906 - 6.181"	SCE16-37.5	SCE24-37.5	37.5	1.476"
157 - 164	6.181 - 6.457"	SCE16-34	SCE24-34	34.0	1.339"
164 - 170	6.457 - 6.693"	SCE16-30.5	SCE24-30.5	30.5	1.201"

ELECTRODES FOR OFFSET HOLDER (SSEDX)

Offset electrode holder for ø1.6 mm (1⁄16") and ø2.4 mm (3⁄32") electrodes.

The use of the offset holder reduces the diameter range of the welding head.

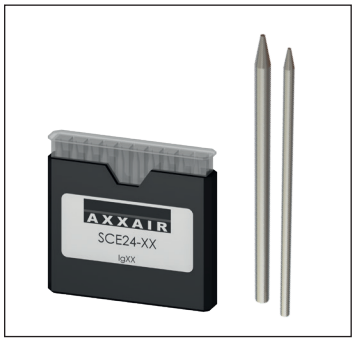

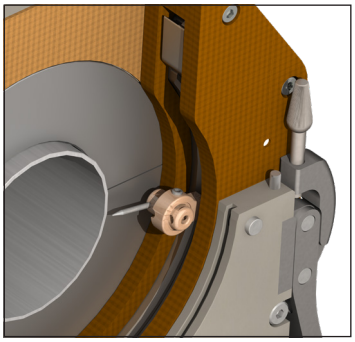

FOR SATFX-52

TUBE O/D (MIN - MAX) (MM / INCH)		ELECTRODE DIAMETER 1.6 MM (1⁄16") PART NO.	ELECTRODE DIAMETER 2.4 MM (3⁄32") PART NO.	ELECTRODE LENGTH (MM / INCH)	
6 - 13	0.236 - 0.512"	SCE16-27	SCE24-27	27	1.063"
9 - 16	0.354 - 0.630"	SCE16-25.5	SCE24-25.5	25.5	1.004"
11 - 18	0.433 - 0.709"	SCE16-24.5	SCE24-24.5	24.5	0.965"
16 - 23	0.630 - 0.906"	SCE16-22	SCE24-22	22	0.866"
18 - 25	0.709 - 0.984"	SCE16-21	SCE24-21	21	0.827"
20 - 27	0.787 - 1.063"	SCE16-20	SCE24-20	20	0.787"
22 - 29	0.866 - 1.142"	SCE16-19	SCE24-19	19	0.748"
23 - 30	0.906 - 1.181"	SCE16-18.5	SCE24-18.5	18.5	0.728"
24 - 31	0.945 - 1.220"	SCE16-18	SCE24-18	18	0.709"
25 - 32	0.984 - 1.260"	SCE16-17.5	SCE24-17.5	17.5	0.689"
30 - 37	1.181 - 1.457"	SCE16-15	SCE24-15	15	0.591"
36 - 43	1.417 - 1.693"	SCE16-12	SCE24-12	12	0.472"

FOR SATFX-76

TUBE O/D (MIN - MAX) (MM / INCH)		ELECTRODE DIAMETER 1.6 MM (1⁄16") PART NO.	ELECTRODE DIAMETER 2.4 MM (3⁄32") PART NO.	ELECTRODE LENGTH (MM / INCH)	
6 - 9	0.236 - 0.354"	SCE16-41	SCE24-41	41	1.614"
9 - 16	0.354 - 0.630"	SCE16-37.5	SCE24-37.5	37.5	1.476"
16 - 23	0.630 - 0.906"	SCE16-34	SCE24-34	34	1.339"
23 - 30	0.906 - 1.181"	SCE16-30.5	SCE24-30.5	30.5	1.201"
30 - 37	1.181 - 1.457"	SCE16-27	SCE24-27	27	1.063"
33 - 40	1.299 - 1.575"	SCE16-25.5	SCE24-25.5	25.5	1.004"
35 - 42	1.378 - 1.654"	SCE16-24.5	SCE24-24.5	24.5	0.965"
40 - 47	1.575 - 1.850"	SCE16-22	SCE24-22	22	0.866"
42 - 49	1.654 - 1.929"	SCE16-21	SCE24-21	21	0.827"
44- 51	1.732 - 2.008"	SCE16-20	SCE24-20	20	0.787"
46 - 53	1.811 - 2.087"	SCE16-19	SCE24-19	19	0.748"
47 - 54	1.850 - 2.126"	SCE16-18.5	SCE24-18.5	18.5	0.728"
48 - 55	1,890 - 2,165"	SCE16-18	SCE24-18	18	0.709"
49 - 56	1.929 - 2.205"	SCE16-17.5	SCE24-17.5	17.5	0.689"
54 - 61	2.126 - 2.402"	SCE16-15	SCE24-15	15	0.591"
60 - 67	2.362 - 2.638"	SCE16-12	SCE24-12	12	0.472"

FOR SATFX-115

TUBE O/D (MIN - MAX) (MM / INCH)		ELECTRODE DIAMETER 1.6 MM (1/16") PART NO.	ELECTRODE DIAMETER 2.4 MM (3/32") PART NO.	ELECTRODE LENGTH (MM / INCH)	
12 - 14	0.472 - 0.551"	SCE16-58.5	SCE24-58.5	58.5	2.303"
14 - 21	0.551 - 0.827"	SCE16-55	SCE24-55	55	2.165"
21 - 28	0.827 - 1.102"	SCE16-51.5	SCE24-51.5	51.5	2.028"
28 - 35	1.102 - 1.378"	SCE16-48	SCE24-48	48	1.890"
35 - 42	1.378 - 1.654"	SCE16-44.5	SCE24-44.5	44.5	1.752"
42 - 49	1.654 - 1.929"	SCE16-41	SCE24-41	41	1.614"
49 - 56	1.929 - 2.205"	SCE16-37.5	SCE24-37.5	37.5	1.476"
56 - 63	2.205 - 2.480"	SCE16-34	SCE24-34	34	1.339"
63 - 70	2.480 - 2.756"	SCE16-30.5	SCE24-30.5	30.5	1.201"
70 - 77	2.756 - 3.031"	SCE16-27	SCE24-27	27	1.063"
73 - 80	2.874 - 3.150"	SCE16-25.5	SCE24-25.5	25.5	1.004"
75 - 82	2.953 - 3.228"	SCE16-24.5	SCE24-24.5	24.5	0.965"
80 - 87	3.150 - 3.425"	SCE16-22	SCE24-22	22	0.866"
82 - 89	3.228 - 3.504"	SCE16-21	SCE24-21	21	0.827"
84 - 91	3.307 - 3.583"	SCE16-20	SCE24-20	20	0.787"
86 - 93	3.386 - 3.661"	SCE16-19	SCE24-19	19	0.748"
87- 94	3.425 - 3.701"	SCE16-18.5	SCE24-18.5	18.5	0.728"
88 - 95	3.465 - 3.740"	SCE16-18	SCE24-18	18	0.709"
89 - 96	3.504 - 3.780"	SCE16-17.5	SCE24-17.5	17.5	0.689"
94 - 101	3.701 - 3.976"	SCE16-15	SCE24-15	15	0.591"
100 - 107	3.937 - 4.213"	SCE16-12	SCE24-12	12	0.472"

FOR SATFX-170

TUBE O/D (MIN - MAX) (MM / INCH)		ELECTRODE DIAMETER 1.6 MM (1/16") PART NO.	ELECTRODE DIAMETER 2.4 MM (3/32") PART NO.	ELECTRODE LENGTH (MM / INCH)	
38 - 44	1.496 - 1.732"	SCE16-72.5	SCE24-72.5	72.5	2.854"
41 - 47	1.614 - 1.850"	SCE16-69	SCE24-69	69	2.717"
43 - 49	1.693 - 1.929"	SCE16-68	SCE24-68	68	2.677"
48 - 54	1.890 - 2.126"	SCE16-65.5	SCE24-65.5	65.5	2.579"
53 - 59	2.087 - 2.323"	SCE16-63	SCE24-63	63	2.480"
55 - 61	2.165 - 2.402"	SCE16-62	SCE24-62	62	2.441"
59 - 65	2.323 - 2.559"	SCE16-60	SCE24-60	60	2.362"
62 - 68	2.441 - 2.677"	SCE16-58.5	SCE24-58.5	58.5	2.303"
67 - 73	2.638 - 2.874"	SCE16-56	SCE24-56	56	2.205"
69 - 75	2.717 - 2.953"	SCE16-55	SCE24-55	55	2.165"
74 - 80	2.913 - 3.150"	SCE16-52.5	SCE24-52.5	52.5	2.067"
79 -85	3.110 - 3.346"	SCE16-50	SCE24-50	50	1.969"
83 -89	3.268 - 3.504"	SCE16-48	SCE24-48	48	1.890"
88 - 94	3.465 - 3.701"	SCE16-45.5	SCE24-45.5	45.5	1.791"
93 - 99	3.661 - 3.898"	SCE16-43	SCE24-43	43	1.693"
97 -103	3.819 - 4.055"	SCE16-41	SCE24-41	41	1.614"
102 - 108	4.016 - 4.252"	SCE16-38.5	SCE24-38.5	38.5	1.516"
107 - 113	4.213 - 4.449"	SCE16-36	SCE24-36	36	1.417"
111 - 117	4.370 - 4.606"	SCE16-34	SCE24-34	34	1.339"
116 - 122	4.567 - 4.803"	SCE16-31.5	SCE24-31.5	31.5	1.240"
121 - 127	4.764 - 5.000"	SCE16-29	SCE24-29	29	1.142"
125 - 131	4.921 - 5.157"	SCE16-27	SCE24-27	27	1.063"
130 - 136	5.118 - 5.354"	SCE16-24.5	SCE24-24.5	24.5	0.965"
135 - 141	5.315 - 5.551"	SCE16-22	SCE24-22	22	0.866"
139 - 145	5.472 - 5.709"	SCE16-20	SCE24-20	20	0.787"
144 - 150	5.669 - 5.906"	SCE16-17.5	SCE24-17.5	17.5	0.689"
149 - 155	5.866 - 6.102"	SCE16-15	SCE24-15	15	0.591"
151 - 161	5.945 - 6.339"	SCE16-12	SCE24-12	12	0.472"

ELECTRODES FOR INCLINED HOLDER (SSEIX)

Inclined electrode holder for ø 1.6 mm / 1/16" and ø 2.4 mm / 3/32" electrodes.

The use of the inclined holder reduces the diameter range of the welding head.

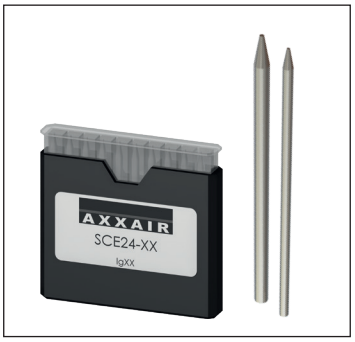

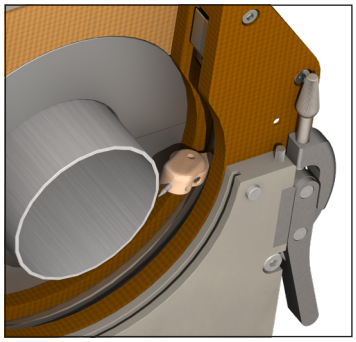

FOR SATFX-52

TUBE O/D (MIN - MAX) (MM / INCH)								ELECTRODE DIAMETER 1.6 MM (1/16") PART NO.	ELECTRODE DIAMETER 2.4 MM (3/32") PART NO.	ELECTRODE LENGTH (MM / INCH)	
0° INCLINED		15° INCLINED		30° INCLINED		45° INCLINED					
-	-	-	-	-	-	6.00 - 12.61 mm *	0.236 - 0.496" *	SCE16-27	SCE24-27	27	1.063"
-	-	-	-	-	-	7.73 - 14.73 mm *	0.304 - 0.580" *	SCE16-25.5	SCE24-25.5	25.5	1.004"
-	-	-	-	-	-	9.14 - 16.14 mm *	0.360 - 0.635" *	SCE16-24.5	SCE24-24.5	24.5	0.965"
-	-	-	-	-	-	12.68 - 19.68 mm *	0.499 - 0.775" *	SCE16-22	SCE24-22	22	0.866"
-	-	-	-	6.00 - 12.38 mm **	0.236 - 0.487" **	14.09 - 21.09 mm *	0.555 - 0.830 *	SCE16-21	SCE24-21	21	0.827"
-	-	-	-	7.11- 14.11 mm **	0.280 - 0.555" **	15.50 - 22.50 mm *	0.610 - 0.886" *	SCE16-20	SCE24-20	20	0.787"
-	-	-	-	8.85 - 15.85 mm **	0.348 - 0.624" **	16.92 - 23.92 mm *	0.666 - 0.942" *	SCE16-19	SCE24-19	19	0.748"
-	-	-	-	9.71 - 16.71 mm **	0.382 - 0.658" **	17.63 - 24.63 mm *	0.694 - 0.970" *	SCE16-18.5	SCE24-18.5	18.5	0.728"
-	-	6.00 - 12.70 mm	0.236 - 0.5"	10.58 - 17.58 mm **	0.416 - 0.692" **	18.33 - 25.33 mm *	0.722 - 0.997" *	SCE16-18	SCE24-18	18	0.709"
6.00 - 12.50 mm	0.236 - 0.492 "	6.67 - 13.67 mm	0.262 - 0.538"	11.44 - 18.44 mm **	0.450 - 0.726" **	19.04 - 26.04 mm *	0.750 - 1.025" *	SCE16-17.5	SCE24-17.5	17.5	0.689"
10.50 - 17.50 mm	0.413 - 0.689"	11.50 - 18.50 mm	0.453 - 0.728"	15.77 - 22.77 mm	0.621 - 0.896"	22.58 - 29.58 mm **	0.889 - 1.164" **	SCE16-15	SCE24-15	15	0.591"
16.5 - 23.5 mm	0.650 - 0.925"	17.29 - 24.29 mm	0.680 - 0.956"	20.97 - 27.97 mm	0.825 - 1.101"	26.82- 33.82 mm **	1.056 - 1.331" **	SCE16-12	SCE24-12	12	0.472"

*** Special application: contact us**
**** With elbow flanges (or collets) only**

FOR SATFX-76

TUBE O/D (MIN - MAX) (MM / INCH)								ELECTRODE DIAMETER 1.6 MM (1/16") PART NO.	ELECTRODE DIAMETER 2.4 MM (3/32") PART NO.	ELECTRODE LENGTH (MM / INCH)	
0° INCLINED		15° INCLINED		30° INCLINED		45° INCLINED					
-	-	-	-	-	-	9.83 - 16.83 mm *	0.387 - 0.663" *	SCE16-41	SCE24-41	41	1.614"
-	-	-	-	-	-	14.78 - 21.78 mm *	0.582 - 0.857" *	SCE16-37.5	SCE24-37.5	37.5	1.476"
-	-	-	-	6.89 - 13.89 mm *	0.271 - 0.547 " *	19.73 - 26.73 mm *	0.777 - 1.052" *	SCE16-34	SCE24-34	34	1.339"
6 - 10.5 mm	0.236 - 0.413"	6 - 12.57 mm	0.236 - 0.495"	12.95 - 19.95 mm *	0.510 - 0.785 " *	24.68 - 31.68 mm *	0.972 - 1.247" *	SCE16-30.5	SCE24-30.5	30.5	1.201"
10,5 - 17.5 mm	0.413 - 0.689"	12.34 - 19.34 mm	0.486 - 0.761"	19.01 - 26.01 mm *	0.748 - 1.024" *	29.63 - 36.63 mm *	1.167 - 1.442" *	SCE16-27	SCE24-27	27	1.063"
13.5 - 20.5 mm	0.531 - 0.807"	15.23 - 22.23 mm	0.6 - 0.875"	21.61 - 28.61 mm **	0.851 - 1.126" **	31.75 - 38.75 mm *	1.250 - 1.526" *	SCE16-25.5	SCE24-25.5	25.5	1.004"
15.5 - 22.5 mm	0.610 - 0.886"	17.17 - 24.17 mm	0.676 - 0.951"	23.34 - 30.34 mm **	0.919 - 1.164" **	33.16 - 40.16 mm *	1.306 - 1.581" *	SCE16-24.5	SCE24-24.5	24.5	0.965"
20.5 - 27.5 mm	0.807 - 1.082"	22.00 - 29.00 mm	0.866 - 1.142"	27.67 - 34.67 mm **	1.089 - 1.365" **	36.70 - 43.70 mm *	1.445 - 1.720" *	SCE16-22	SCE24-22	22	0.866"
22.5 - 29.5 mm	0.886 - 1.161"	23.93 - 30.93 mm	0.942 - 0.218"	29.40 - 36.40 mm **	1.157 - 1.433" **	38.11 - 45.11 mm *	1.5 - 1.776" *	SCE16-21	SCE24-21	21	0.827"
24.5 - 31.5 mm	0.964 - 1.240"	25.86 - 32.86 mm	1.018 - 1.294"	31.13 - 38.13 mm **	1.226 - 1.501" **	39.52 - 46.52 mm *	1.556 - 1.831" *	SCE16-20	SCE24-20	20	0.787"
26.5 - 33.5 mm	1.043 - 1.319"	27.79 - 34.79 mm	1.094 - 1.370"	32.87 - 39.87 mm **	1.294 - 1.570" **	40.94 - 47.94 mm *	1.612 - 1.887" *	SCE16-19	SCE24-19	19	0.748"
27.5 - 34.5 mm	1.083 - 1.358"	28.76 - 35.76 mm	1.132 - 1.408"	33.73 - 40.73 mm **	1.328 - 1.603" **	41.65 - 48.65 mm *	1.640 - 1.915" *	SCE16-18.5	SCE24-18.5	18.5	0.728"
28.5 - 35.5 mm	1.122 - 1.398"	29.72 - 36.72 mm	1.170 - 1.446"	34.60 - 41.60 mm **	1.362 - 1.638" **	42.35 - 49.35 mm *	1.667 - 1.943" *	SCE16-18	SCE24-18	18	0.709"
29.5 - 36.5 mm	1.161 - 1.437"	30.69 - 37.69 mm	1.208 - 1.484"	35.46 - 42.46 mm **	1.396 - 1.672" **	43.06 - 50.06 mm *	1.695 - 1.971" *	SCE16-17.5	SCE24-17.5	17.5	0.689"
34.5 - 41.5 mm	1.358 - 1.634"	35.52 - 42.52 mm	1.398 - 1.674"	39.79 - 46.79 mm	1.566 - 1.841"	46.60 - 53.60 mm **	1.835 - 2.110" **	SCE16-15	SCE24-15	15	0.591"
40.5 - 47.5 mm	1.594 - 1.870"	41.31 - 48.31 mm	1.626 - 1.902"	44.99 - 51.99 mm	1.771 - 2.047"	50.84 - 57.84 mm **	2.002 - 2.277" **	SCE16-12	SCE24-12	12	0.472"

*** Special application: contact us**
**** With elbow flanges (or collets) only**

FOR SATFX-115

TUBE O/D (MIN - MAX) (MM / INCH)								ELECTRODE DIAMETER 1.6 MM (1/16") PART NO.	ELECTRODE DIAMETER 2.4 MM (3/32") PART NO.	ELECTRODE LENGTH (MM / INCH)	
0° INCLINED		15° INCLINED		30° INCLINED		45° INCLINED					
-	-	-	-	-	-	20.13 - 27.13 mm *	0.793 - 1.068" *	SCE16-62	SCE24-62	62	2.441"
-	-	-	-	-	-	25.08 - 32.08 mm *	0.987 - 1.263" *	SCE16-58.5	SCE24-58.5	58.5	2.303"
-	-	-	-	10.51 - 17.51 mm*	0.414 - 0.689" *	30.03 - 37.03 mm *	1.182 - 1.458" *	SCE16-55	SCE24-55	55	2.165"
-	-	-	-	16.57 - 23.57 mm*	0.652 - 0.928" *	34.98 - 41.98 mm *	1.377 - 1.653" *	SCE16-51.5	SCE24-51.5	51.5	2.028"
12 - 15.5 mm	0.472 - 0.610"	12.00 - 18.77 mm **	0.472 - 0.739**	22.64 - 29.64 mm *	0.891 - 1.167" *	39.93 - 46.93 mm *	1.572 - 1.848" *	SCE16-48	SCE24-48	48	1.890"
15.5 - 22.5 mm	0,610 - 0.886"	18.53 - 25.53 mm **	0.730 - 1.005" **	28.70 - 35.70 mm *	1.130 - 1.406" *	44.88 - 51.88 mm *	1.767 - 2.043" *	SCE16-44.5	SCE24-44.5	44.5	1.752"
22.5 - 9.5 mm	0.886 - 1.161"	25.29 - 32.29 mm**	0.996 - 1.271" **	34.76 - 41.76 mm *	1.369 - 1.644" *	49.83 - 56.83 mm *	1.962 - 2.237" *	SCE16-41	SCE24-41	41	1.614"
29.5 36.5 mm	1,161 - 1.437"	32.05 - 39.05 mm **	1.262 - 1.537" **	40.82 - 47.82 mm *	1.607 - 1.883" *	54.78 - 61.78 mm *	2.157 - 2.432" *	SCE16-37.5	SCE24-37.5	37.5	1.476"
36.5 - 43.5 mm	1.437 - 1.713"	38.81 - 45.81 mm	1.528 - 1.804"	46.89 - 53.89 mm *	1.846 - 2.122" *	59.73 - 66.73 mm *	2.352 - 2.627" *	SCE16-34	SCE24-34	34	1.339"
43.5 - 50.5 mm	1.713 - 1.988"	45.57 - 52.57 mm	1.794 - 2.070"	52.95 - 59.95 mm *	2.085 - 2.360" *	64.68 - 71.68 mm *	2.546 - 2.822" *	SCE16-30.5	SCE24-30.5	30.5	1.201"
50.5 - 57.5 mm	1.988 - 2.264"	52.34 - 59.34 mm	2.061 - 2.336"	59.01 - 66.01 mm *	2.323 - 2.599" *	69.63 - 76.63 mm *	2.741 - 3.017" *	SCE16-27	SCE24-27	27	1.063"
53.5 - 60.5 mm	2.106 - 2.382"	55.23 - 62.23 mm	2.174 - 2.450"	61.61 - 68.61 mm **	2.426 - 2.701" **	71.75 - 78.75 mm *	2.825 - 3.1" *	SCE16-25.5	SCE24-25.5	25	0.984"
55.5 - 62.5 mm	2.185 - 2.461"	57.17 - 64.17 mm	2.251 - 2.526"	63.34 - 70.34 mm **	2.494 - 2.769" **	73.16 - 80.16 mm *	2.880 - 3.156" *	SCE16-24.5	SCE24-24.5	24.5	0.965"
60.5 - 67.5 mm	2.382 - 2.657"	62.00 - 69.00 mm	2.441 - 2.717"	67.67 - 74.67 mm **	2.664 - 2.940" **	76.70 - 83.70 mm *	3.020 - 3.295" *	SCE16-22	SCE24-22	22	0.866"
62.5 - 69.5 mm	2.461 - 2.736"	63.93 - 70.93 mm	2.517 - 2.793"	69.40 - 76.40 mm **	2.732 - 3.008" **	78.11 - 85.11 mm *	3.075 - 3.351" *	SCE16-21	SCE24-21	21	0.827"
64.5 - 71.5 mm	2.539 - 2.815"	65.86 - 72.86 mm	2.593 - 2.869"	71.13 - 78.13 mm **	2.800 - 3.076" **	79.52 - 86.52 mm *	3.131 - 3.406" *	SCE16-20	SCE24-20	20	0.787"
66.5 - 73.5 mm	2.618 - 2.894"	67.79 - 74.79 mm	2.669 - 2.944"	72.87 - 79.87 mm **	2.869 - 3.144" **	80.94 - 87.94 mm *	3.187 - 3.462" *	SCE16-19	SCE24-19	19	0.748"
67.5 - 74.5 mm	2.657 - 2.933"	68.76 - 75.76 mm	2.707 - 2.983"	73.73 - 80.73 mm **	2.903 - 3.178" **	81.65 - 88.65 mm *	3.215 - 3.490" *	SCE16-18.5	SCE24-18.5	18.5	0.728"
68.5 - 75.5 mm	2.697 - 2.972"	69.72 - 76.72 mm	2.745 - 3.020"	74.60 - 81.60 mm **	2.937 - 3.213" **	82.35 - 89.35 mm *	3.242 - 3.518" *	SCE16-18	SCE24-18	18	0.709"
69.5 - 76.5 mm	2.736 - 3.012"	70.69 - 77.69 mm	2.783 - 3.059"	75.46 - 82.46 mm **	2.971 - 3.246" **	83.06 - 90.06 mm *	3.270 - 3.546" *	SCE16-17.5	SCE24-17.5	17.5	0.689"
74.5 - 81.5 mm	2.933 - 3.209"	75.52 - 82.52 mm	2.973 - 3.249"	79.79 - 86.79 mm	3.141 - 3.417"	86.60 - 93.60 mm **	3.409 - 3.685" **	SCE16-15	SCE24-15	15	0.591"
80.5 - 87.5 mm	3.169 - 3.445"	81.31 - 88.31 mm	3.201 - 3.477"	84.99 - 91.99 mm	3.346 - 3.622"	90.84 - 97.84 mm **	3.576 - 3.852" **	SCE16-12	SCE24-12	12	0.472"

*** Special application: contact us**
**** With elbow flanges (or collets) only**

FOR SATFX-170

TUBE O/D (MIN - MAX) (MM / INCH)								ELECTRODE DIAMETER 1.6 MM (1/16") PART NO.	ELECTRODE DIAMETER 2.4 MM (3/32") PART NO.	ELECTRODE LENGTH (MM / INCH)	
0° INCLINED		15° INCLINED		30° INCLINED		45° INCLINED					
-	-	-	-	-	-	34 - 39 mm*	1.34 - 1.54"*	SCE16-92	SCE24-92	92	3.62"
-	-	-	-	-	-	46 - 50 mm*	1.81 - 1.97"*	SCE16-84	SCE24-84	84	3.31"
-	-	-	-	-	-	57 - 62 mm*	2.24 - 2.44"*	SCE16-76	SCE24-76	76	2.99"
-	-	-	-	37 - 41 mm*	1.46 - 1.61"*	62 - 67 mm*	2.44 - 2.64"*	SCE16-72.5	SCE24-72.5	72.5	2.85"
-	-	-	-	43 - 47 mm*	1.69 - 1.85"*	67 - 71 mm*	2.64 - 2.80"*	SCE16-69	SCE24-69	69	2.72"
-	-	-	-	45 - 49 mm*	1.77 - 1.93"*	68 - 73 mm*	2.68 - 2.87"*	SCE16-68	SCE24-68	68	2.68"
-	-	-	-	47 - 52 mm*	1.85 - 2.05"*	70 - 75 mm*	2.76 - 2.95"*	SCE16-66.5	SCE24-66.5	66.5	2.62"
-	-	34 - 39 mm*	1.34 - 1.54"*	49 - 53 mm*	1.93 - 2.09"*	72 - 76 mm*	2.83 - 2.99"*	SCE16-65.5	SCE24-65.5	65.5	2.58"
-	-	39 - 44 mm*	1.54 - 1.73"*	53 - 58 mm*	2.09 - 2.28"*	75 - 80 mm*	2.95 - 3.15"*	SCE16-63	SCE24-63	63	2.48"
37 - 42 mm	1.46 - 1.65"	41 - 46 mm*	1.61 - 1.81"*	55 - 59 mm*	2.17 - 2.32"*	77 - 81 mm*	3.03 - 3.19"*	SCE16-62	SCE24-62	62	2.44"
41 - 46 mm	1.61 - 1.81"	45 - 50 mm*	1.77 - 1.97"*	58 - 63 mm*	2.28 - 2.48"*	80 - 84 mm*	3.15 - 3.31"*	SCE16-60	SCE24-60	60	2.36"
44 - 49 mm	1.73 - 1.93"	48 - 53 mm*	1.89 - 2.09"*	61 - 65 mm*	2.40 - 2.56"*	82 - 86 mm*	3.23 - 3.39"*	SCE16-58.5	SCE24-58.5	58.5	2.30"
49 - 54 mm	1.93 - 2.13"	53 - 57 mm*	2.09 - 2.24"*	65 - 70 mm*	2.56 - 2.76"*	85 - 90 mm*	3.35 - 3.54"*	SCE16-56	SCE24-56	56	2.20"
51 - 56 mm	2.01 - 2.20"	55 - 60 mm**	2.17 - 2.36"**	67 - 71 mm*	2.64 - 2.80"*	87 - 91 mm*	3.43 - 3.58"*	SCE16-55	SCE24-55	55	2.17"
56 - 61 mm	2.20 - 2.40"	60 - 64 mm**	2.36 - 2.52"**	71 - 76 mm*	2.80 - 2.99"*	90 - 94 mm*	3.54 - 3.70"*	SCE16-52.5	SCE24-52.5	52.5	2.07"
58 - 63 mm	2.28 - 2.48"	62 - 66 mm**	2.44 - 2.60"**	73 - 78 mm*	2.87 - 3.07"*	92 - 96 mm*	3.62 - 3.78"*	SCE16-51.5	SCE24-51.5	51.5	2.03"
61 - 66 mm	2.40 - 2.60"	64 - 69 mm**	2.52 - 2.72"**	76 - 80 mm*	2.99 - 3.15"*	94 - 98 mm*	3.70 - 3.86"*	SCE16-50	SCE24-50	50	1.97"
65 - 70 mm	2.56 - 2.76"	68 - 73 mm**	2.68 - 2.87"**	79 - 84 mm*	3.11 - 3.31"*	96 - 101 mm*	3.78 - 3.98"*	SCE16-48	SCE24-48	48	1.89"
70 - 75 mm	2.76 - 2.95"	73 - 78 mm**	2.87 - 3.07"**	84 - 88 mm*	3.31 - 3.46"*	100 - 104 mm*	3.94 - 4.09"*	SCE16-45.5	SCE24-45.5	45.5	1.79"
72 - 77 mm	2.83 - 3.03"	75 - 79 mm**	2.95 - 3.11"**	85 - 90 mm*	3.35 - 3.54"*	102 - 106 mm*	4.02 - 4.17"*	SCE16-44.5	SCE24-44.5	44.5	1.75"
75 - 80 mm	2.95 - 3.15"	78 - 82 mm**	3.07 - 3.23"**	88 - 92 mm*	3.46 - 3.62"*	104 - 108 mm*	4.09 - 4.25"*	SCE16-43	SCE24-43	43	1.69"
79 - 84 mm	3.11 - 3.31"	82 - 86 mm**	3.23 - 3.39"**	91 - 96 mm*	3.58 - 3.78"*	107 - 111 mm*	4.21 - 4.37"*	SCE16-41	SCE24-41	41	1.61"
82 - 87 mm	3.23 - 3.43"	85 - 89 mm**	3.35 - 3.50"**	94 - 98 mm*	3.70 - 3.86"*	109 - 113 mm *	4.29 - 4.45"*	SCE16-39.5	SCE24-39.5	39.5	1.56"
86 - 91 mm	3.39 - 3.58"	89 - 93 mm**	3.50 - 3.66"**	97 - 102 mm*	3.82 - 4.02"*	112 - 116 mm*	4.41 - 4.57"*	SCE16-37.5	SCE24-37.5	37.5	1.48"
89 - 94 mm	3.50 - 3.70"	91 - 96 mm	3.58 - 3.78"	100 - 104 mm*	3.94 - 4.09"*	114 - 118 mm*	4.49 - 4.65"*	SCE16-36	SCE24-36	36	1.42"
93 - 98 mm	3.66 - 3.86"	95 - 100 mm	3.74 - 3.94"	104 - 108 mm*	4.09 - 4.25"*	117 - 121 mm*	4.61 - 4.76"*	SCE16-34	SCE24-34	34	1.34"

* Special application: contact us
** With elbow flanges (or collets) only

FOR SATFX-170

TUBE O/D (MIN - MAX) (MM / INCH)								ELECTRODE DIAMETER 1.6 MM (1/16") PART NO.	ELECTRODE DIAMETER 2.4 MM (3/32") PART NO.	ELECTRODE LENGTH (MM / INCH)	
0° INCLINED		15° INCLINED		30° INCLINED		45° INCLINED					
96 - 101 mm	3.78 - 3.98"	98 - 103 mm	3.86 - 4.06"	107 - 110 mm*	4.21 - 4.33"*	119 - 123 mm*	4.69 - 4.84"*	SCE16-32.5	SCE24-32.5	32.5	1.28"
100 - 105 mm	3.94 - 4.13"	102 - 107 mm	4.02 - 4.21"	110 - 114 mm*	4.33 - 4.49"*	122 - 126 mm*	4.80 - 4.96"*	SCE16-30.5	SCE24-30.5	30.5	1.20"
103 - 108 mm	4.06 - 4.25"	105 - 109 mm	4.13 - 4.29"	113 - 117 mm*	4.45 - 4.61"*	124 - 128 mm*	4.88 - 5.04"*	SCE16-29	SCE24-29	29	1.14"
107 - 112 mm	4.21 - 4.41"	109 - 113 mm	4.29 - 4.45"	116 - 120 mm*	4.57 - 4.72"*	127 - 131 mm*	5.00 - 5.16"*	SCE16-27	SCE24-27	27	1.06"
110 - 115 mm	4.33 - 4.53"	112 - 116 mm	4.41 - 4.57"	119 - 123 mm**	4.69 - 4.84"**	129 - 133 mm*	5.08 - 5.24"*	SCE16-25.5	SCE24-25.5	25.5	1.00"
112 - 117 mm	4.41 - 4.61"	114 - 119 mm	4.49 - 4.69"	120 - 125 mm**	4.72 - 4.92"**	130 - 134 mm*	5.12 - 5.28"*	SCE16-24.5	SCE24-24.5	24.5	0.96"
117 - 122 mm	4.61 - 4.80"	119 - 123 mm	4.69 - 4.84"	125 - 129 mm**	4.92 - 5.08"**	134 - 138 mm*	5.28 - 5.43"*	SCE16-22	SCE24-22	22	0.87"
121 - 126 mm	4.76 - 4.96"	122 - 127 mm	4.80 - 5.00"	128 - 132 mm**	5.04 - 5.20"**	137 - 140 mm*	5.39 - 5.51"*	SCE16-20	SCE24-20	20	0.79"
124 - 129 mm	4.88 - 5.08"	125 - 130 mm	4.92 - 5.12"	131 - 135 mm**	5.16 - 5.31"**	139 - 143 mm*	5.47 - 5.63"*	SCE16-18.5	SCE24-18.5	18.5	0.73"
126 - 131 mm	4.96 - 5.16"	127 - 132 mm	5.00 - 5.20"	132 - 137 mm**	5.20 - 5.39"**	140 - 144 mm*	5.51 - 5.67"*	SCE16-17.5	SCE24-17.5	17.5	0.69"
131 - 137 mm	5.16 - 5.39"	132 - 136 mm	5.20 - 5.35"	137 - 142 mm	5.39 - 5.59"	144 - 148 mm**	5.67 - 5.83"**	SCE16-15	SCE24-15	15	0.59"
137 - 142 mm	5.39 - 5.59"	138 - 142 mm	5.43 - 5.59"	142 - 146 mm	5.59 - 5.75"	148 - 152 mm**	5.83 - 5.98" **	SCE16-12	SCE24-12	12	0.47"

*** Special application: contact us**
**** With elbow flanges (or collets) only**

GAS
STOP

ORBITAL WELDING SOLUTIONS

OPEN WELD HEADS OX SERIES

0.75 - 6.625" o/d / 19 - 170 mm o/d

NEW !

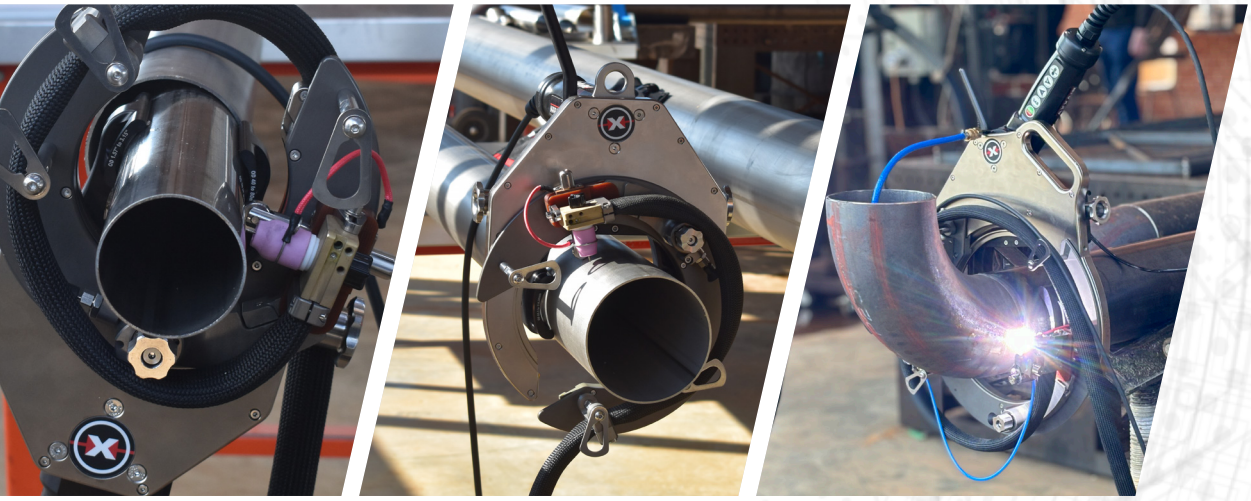

SCAN QR CODE
TO WATCH VIDEO

AXXAIR
AN SPG GROUP BRAND

www.AXXAIR.com

OPEN ORBITAL WELD HEADS OX SERIES (FUSION / FUSION + WIRE)

NEW !

0.75 - 6.625" o/d / 19 - 170 mm o/d

Water cooled

- **Function:** Orbital TIG welding with or without filler metal
- **Materials:** All types of steels and exotic alloys
- **Powered by the SAXX power source**

Experience a new level of performance and versatility with the OX range of open orbital welding heads — engineered to combine compactness, strength, and rigidity in a single integrated system. Designed for evolution, the OX heads enable seamless integration of accessories and options to meet diverse application requirements. Suitable for both on-site and workshop use, these welding heads deliver precision, reliability, and adaptability across a wide range of materials and environments.

Thanks to a modular design, the OX heads provide exceptional welding quality even in confined spaces. Available in three models — OX-3000, OX-4500, and OX-6625 — the range covers diameters from 0.75 to 6.625" (19-170 mm) ensuring high productivity and consistent results across industrial applications.

The OX range is available in configuration to weld with or without wire, providing maximum flexibility to suit your specific welding processes and production needs.

MAIN FEATURES

- **Three available sizes: OX-3000 / OX-4500 / OX-6625**
- Very wide operating range: ideal for diverse welding requirements
- New water-cooled 8m (26ft) welding torch: ensures high heat resistance and durability
- Simplified setup: single key accessory installation and adjustment, no tools required for adjustments during welding

STRONG CLAMPING SYSTEM
Ensures excellent stability during welding

PRECISE AXIAL/ RADIAL AND ANGULAR ALIGNMENT OF THE ELECTRODE
knob system without tool requirement

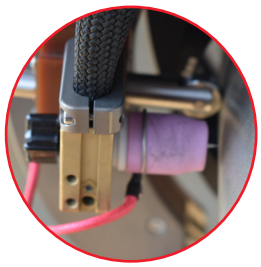

TILTABLE TORCH
Provides enhanced flexibility for fillet weld applications such as socket and flange welds

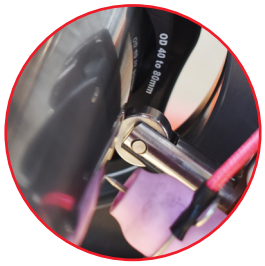

PRECISE OD MECHANICAL PROFILE TRACKING
Guarantees consistent weld quality

ERGONOMIC HANDLE WITH REMOTE CONTROL
Start/stop, electrode rotation, gas, wire feeding set up

DELIVERY & STORAGE

- Delivered in shockproof case
- Includes additional foam designed to accommodate the machine (motor with the angle gearhead module).

OPTIONS

ANGLE GEARHEAD MODULE
adaptable motor configurations for various installation options

Machine configurations with the angle gearhead module *

** See the table on the next page for all possible configurations depending on the model.*

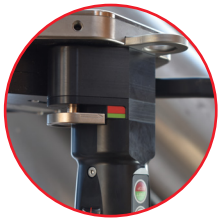

CLUTCH MODULE
enables manual rotation of the welding torch by the operator

EMBEDDED WIRE MODULE *
for all standard wire spools (up to 1kg, 2 lbs)

*available on OX-4500 and OX-6625 models

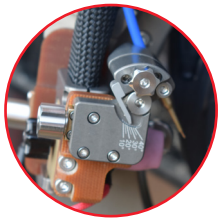

WIRE GUIDE *
Tool free wire position adjustment during welding, with angle indicator.

*must be used with the embedded wire module or the external wire feeder

MODELS

OX-3000	OX-4500	OX-6625
TUBE O/D RANGE: 0.75 - 3" / 19 - 80 mm	TUBE O/D RANGE: 0.75 - 4.5" / 19 - 115 mm	TUBE O/D RANGE: 1.5 - 6.625" / 38 - 170 mm

POWER SOURCE

SAXX-201	SAXX-200	SAXX-210	SAXX-300
Orbital TIG welding power source 200A, 110 - 220v *with cooling system*	Orbital TIG welding power source 200A, 110 - 220v *with cooling system*	Orbital TIG welding power source 210A, 110 - 220v	Orbital TIG welding power source 300A, 400v

OX SERIES TECHNICAL FEATURES

DESCRIPTION	MEAS.	OX-3000	OX-4500	OX-6625
Diameter range	mm (o/d)	19 - 80	19 - 115	38 - 170
	inch (o/d)	0.75 - 3	0.75 - 4.5	1.5 - 6.625
100% duty cycle	Amps	200	200	200
Diameter electrode	mm	1.6 or 2.4	1.6 or 2.4	1.6 or 2.4
	inch	1/16 or 3/32	1/16 or 3/32	1/16 or 3/32
Cooling system	-	Yes	Yes	Yes
Recommended maximum operating temperature	°C	40	40	40
	°F	104	104	104
Unit weight*	kg	8.13	9.18	11.41
	lbs	17.63	19.84	24.25

**Weight of the machines including the welding cable*

ACCESSORY COMPATIBILITY

ACCESSORIES	OX-3000	OX-4500	OX-6625
Angle gearhead module **(OX-AG1)**	●	●	●
Clutch **(OX-CLU1)**	●	●	●
Angle gearhead + clutch **(OX-AG1 + OX-CLU1)**	●	●	●

ACCESSORIES NEEDED FOR OX OPEN HEAD WITH WIRE

Embedded wire module + wire guide **(OX-WF1 + OX-WG1)**	-	●	●
External wire feeder + wire guide **(SADF2X + OX-WG1)**	●	●	●

POSSIBLE CONFIGURATIONS WITH ANGLE GEARHEAD MODULE (WITH OR WITHOUT CLUTCH)

ACCESSORIES / POSITIONS	OX-3000			OX-4500			OX-6625		
	Vertical	45°	Horizontal	Vertical	45°	Horizontal	Vertical	45°	Horizontal
Angle gearhead module **(OX-AG1)**	●	●	●	●	●	●	●	●	-
Angle gearhead + clutch **(OX-AG1 + OX-CLU1)**	●	●	-	●	●	-	●	●	-

STANDARD POSITION (WITHOUT THE ANGLE GEAR MODULE)

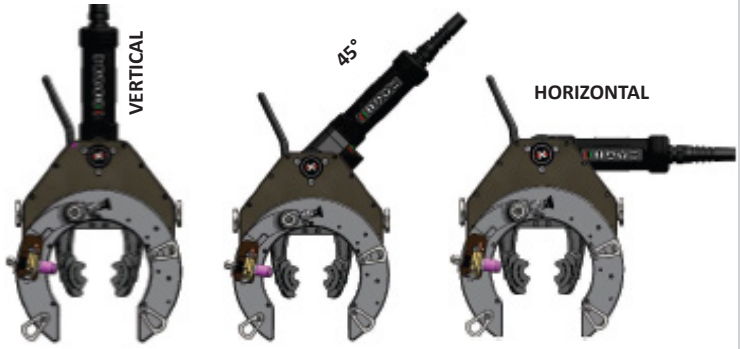

ANGLE GEARHEAD MODULE

The angle gearhead module mounts directly onto the body of the open welding head, significantly reducing the size of the machine to work in confined areas.

Depending on the model and configuration, the module can be installed in vertical, 45°, or horizontal positions, ensuring optimal adaptability to every welding setup.

PART NO.	DESCRIPTION	WEIGHT		PACKAGING DIMENSIONS	
OX-AG1	Angle gearhead module	0,430 kg	0.95 lbs	6.5 x 6.5 x 8 cm	2.6 x 2.6 x 3.2"

CLUTCH MODULE

The clutch module allows the operator to manually wind the welding cables.

Designed for reliability and ease of use, the clutch module mounts directly onto the motor and can be combined with the OX-AG1 angle gearhead module.

PART NO.	DESCRIPTION	WEIGHT		PACKAGING DIMENSIONS	
OX-CLU1	Clutch module	0.427 kg	0.94 lbs	6.5 x 6.5 x 8 cm	2.6 x 2.6 x 3.2"

EMBEDDED WIRE MODULE *

The embedded wire module positions the filler wire spool as close as possible to the weld, ensuring optimal feed stability and precision. It must be associated with the wire guide (Part No. OX-WG1).

A standard wire spool up to 1 kg (2 lbs) (Ø 100 mm) can be mounted directly onto the rotating plate of the machine, minimizing wire path length and improving overall weld quality.

PART NO.	DESCRIPTION	WEIGHT		PACKAGING DIMENSIONS	
OX-WF1	Embedded wire module	1.59 kg	3,5 lbs	30 x 30 x 15 cm	11.8 x 11.8 x 5.9 "

**available on OX-4500 and OX-6625 models*

WIRE GUIDE *

The wire guide ensures precise positioning of the filler wire as it enters the weld pool, delivering consistent and accurate results. The wire guide, supplied for wires from Ø 0.8 (0.030") up to Ø 1.2 mm (0.045"), is attached to a movable support, allowing fine adjustment of the wire's entry point through a simple set of control knobs.

A visual indicator displays the wire exit angle from 0° to 45°, enabling accurate and repeatable positioning.

All installation and adjustment operations can be performed quickly and easily using the supplied 3.0 mm T-wrench ensuring straightforward setup and optimal alignment.

**Compatible with embedded wire module (Part No. OX-WF1) and external wire feeder (Part No. SADF2X)*

PART NO.	DESCRIPTION	WEIGHT		PACKAGING DIMENSIONS	
OX-WG1	Wire guide	0.121 kg	0.267 lbs	6.5 x 6.5 x 8 cm	2.6 x 2.6 x 3.2"

EXTERNAL WIRE FEEDER

- Cable length 5 m max / 16 ft
- Supplied with SAXX power source-connection cable and teflon sheath to guide the wire
- Drive pressure adjusted by adjustable spring, with handle.

PART NO.	DESCRIPTION	WEIGHT		DIMENSIONS	
SADF2X	External wire feeder for SAXX	12 kg	26 lbs	59.7 x 38.4 x 24 cm	23.5 x 15.1 x 9.4"

CABLE EXTENSIONS

Cable extensions are available to increase the operating distance between the welding head and the SAXX power source.

WITHOUT WIRE

PART NO.	DESCRIPTION	WEIGHT		PACKAGING DIMENSIONS	
SAFS-05MX	5m / 16.4 ft extension cable water cooling - without wire	7 kg	15.4 lbs	40 x 59 x 25 cm	16 x 23 x 10"
SAFS-10MX	10 m / 32.8 ft extension cable water cooling - without wire	14 kg	30.9 lbs	40 x 59 x 25 cm	16 x 23 x 10"

WITH WIRE

PART NO.	DESCRIPTION	WEIGHT		PACKAGING DIMENSIONS	
SAFS-05MXF	5m / 16.4 ft extension cable water cooling - with wire	7 kg	15.4 lbs	40 x 59 x 25 cm	16 x 23 x 10"
SAFS-10MXF	10 m / 32.8 ft extension cable water cooling - with wire	14 kg	30.9 lbs	40 x 59 x 25 cm	16 x 23 x 10"

AXXAIR
INNOVATIVE ORBITAL SOLUTIONS

OX SERIES CONSUMABLES

ELECTRODES

- Tungsten electrodes
- AXXAIR's electrodes are specifically sharpened at 20° with a flat

PART NO.	DIAMETER ELECTRODES	DESCRIPTION	WEIGHT		DIMENSIONS	
SCE16-50	1.6 mm 1/16"	Box of 10 tungsten electrodes, diameter 1.6 mm (1/16"), length 50 mm	0.02 kg	0.044 lbs	5.5 x 4.5 x 1 cm	1.97 x 1.57 x 0.39"
SCE24-50	2.4 mm 3/32"	Box of 10 tungsten electrodes diameter 2.4 mm (3/32"), length 50 mm	0.05 kg	0.11 lbs	5.5 x 4.5 x 1 cm	1.97 x 1.57 x 0.39"

CONSUMABLES KIT

This kit consists of: 4 long nozzles and 2 short nozzles, 4 electrode clamps, 20 electrodes, Ø 1.6 and 20 Ø 2.4 electrodes, 2 teflon rings, 1 short cap type 9/20 and 1 FACOM screwdriver

PART NO.	DIAMETER ELECTRODES	DESCRIPTION	WEIGHT		DIMENSIONS (PLASTIC BOX)	
SKTO-01	1.6 or 2.4 mm 1/16 or 3/32"	Spare parts kit for straight torch diameter 1.6 mm or 2.4 mm	0.3 kg	0.66 lbs	12 x 17.5 x 4 cm	4.7 x 7 x 1.6"

FLANGE WELDING KIT WITH LONG ACCESSORIES

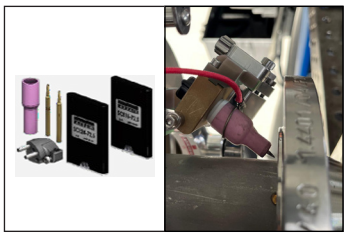

The kit includes 1 ceramic welding nozzle, 3 extended wire feed nozzles, and 2 boxes of electrodes (Ø 1.6 mm and Ø 2.4 mm).

PART NO.	DESCRIPTION	WEIGHT		PACKAGING DIMENSIONS	
OX-KIT1	Flange welding kit	0,1 kg	0.22 lbs	10 x 10 x 2.5 cm	3.9 x 3.9 x 0.98"

DIMENSIONS (MM/INCH)

OX-3000

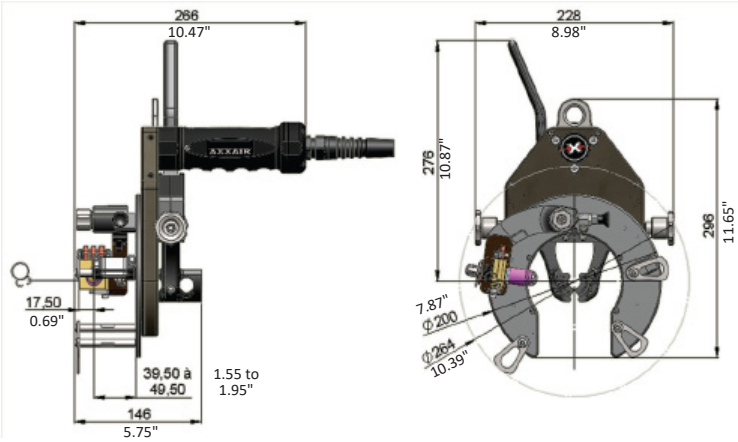

OX-3000 with angle gearhead module

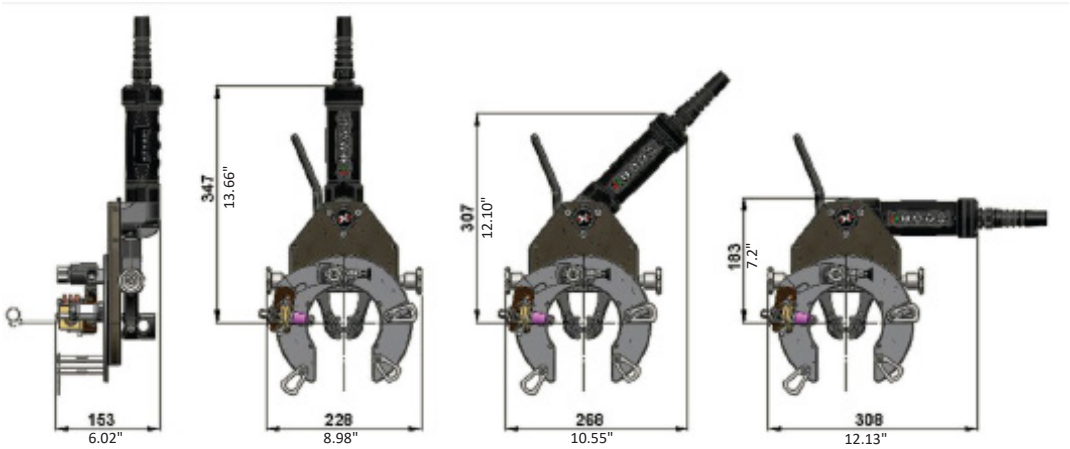

OX-4500

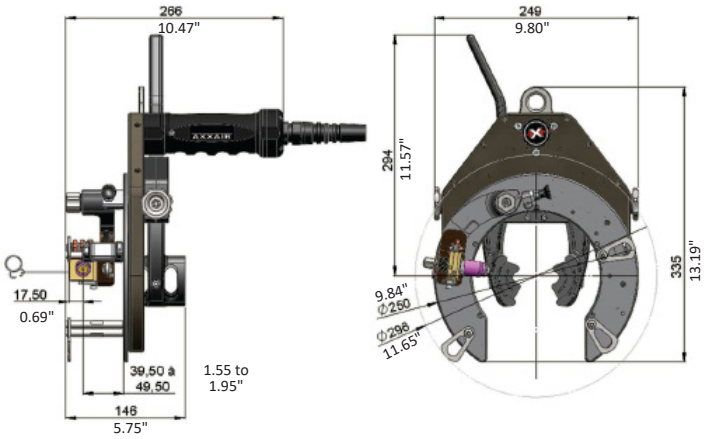

OX-4500 with angle gearhead module

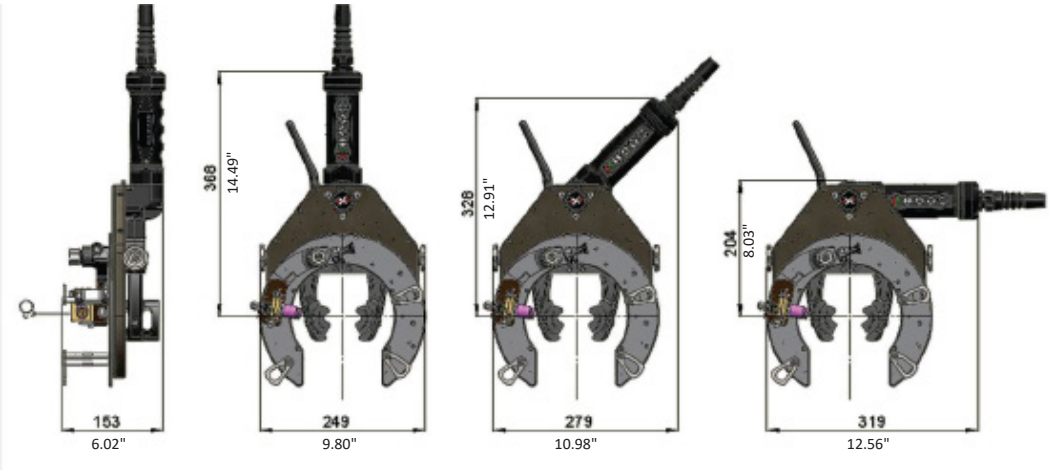

OX-6625

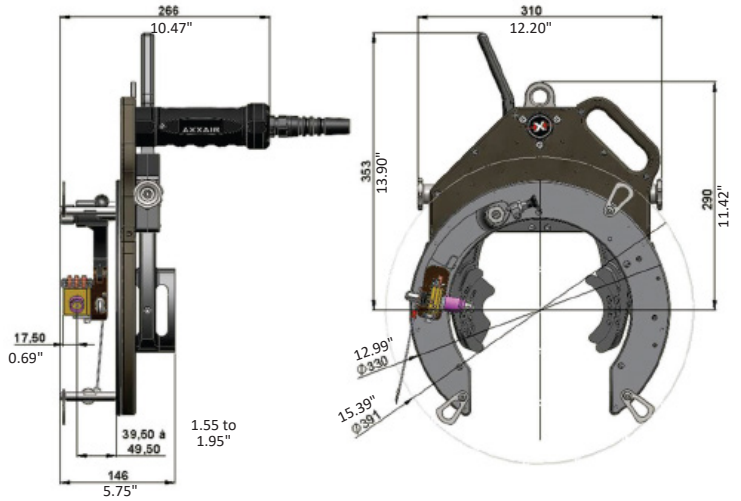

OX-6625 with angle gearhead module

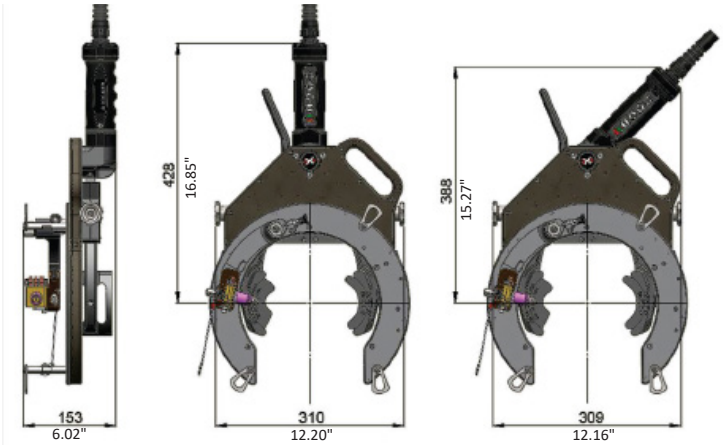

DIMENSIONS WITH CLUTCH MODULE (MM/INCH)

OX-3000

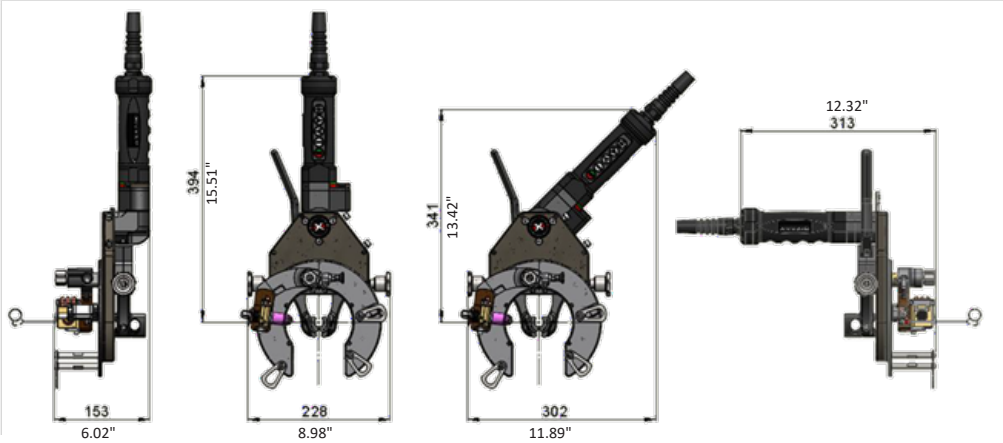

OX-4500

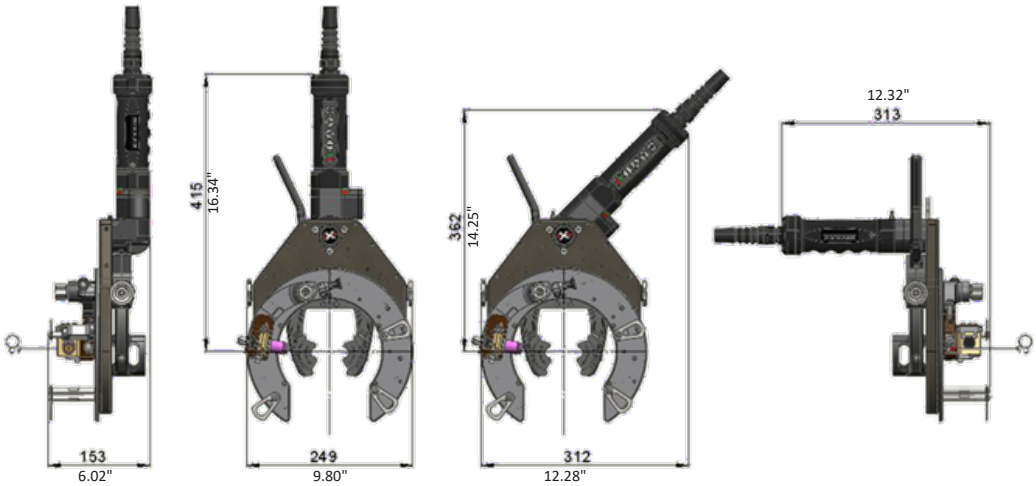

OX-6625

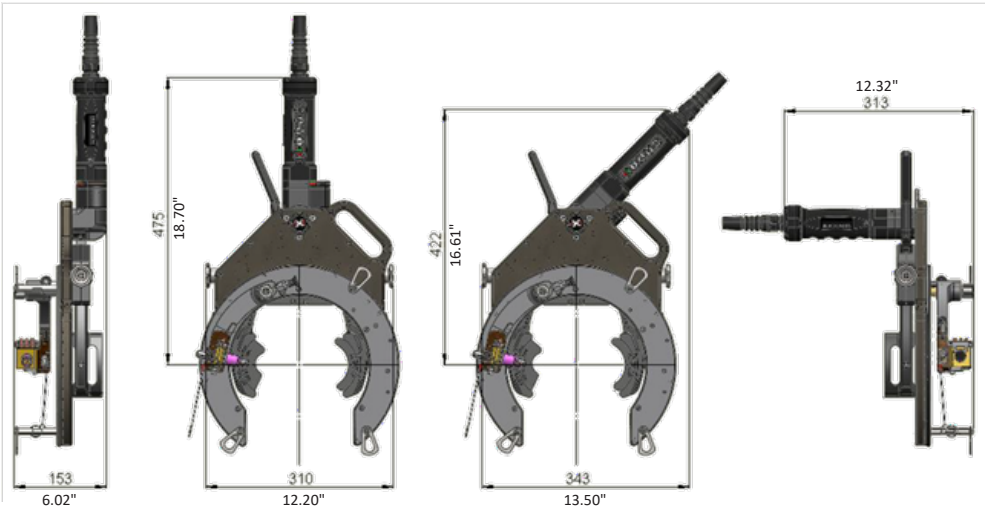

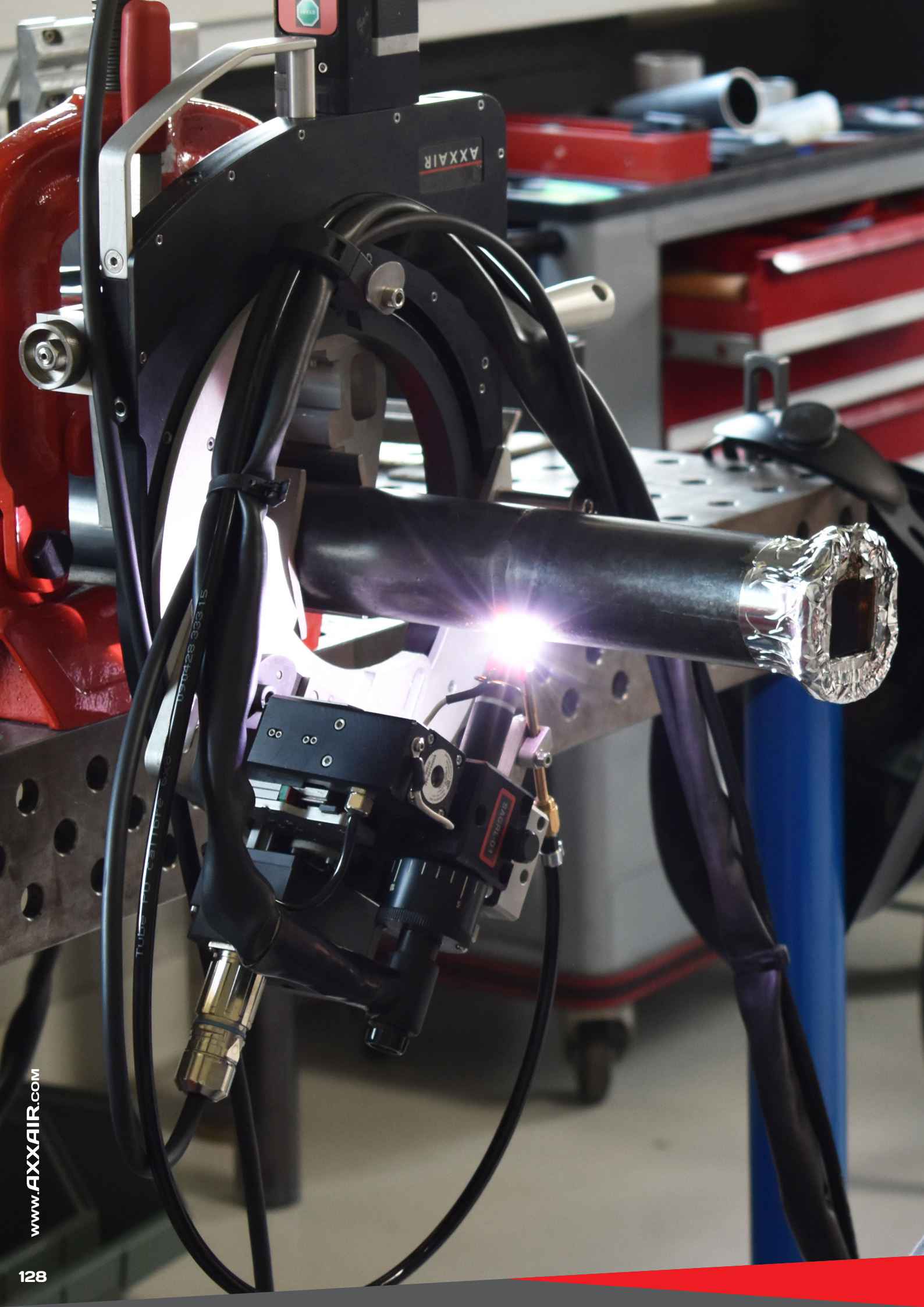
AXXAIR
EAGRL-01

ORBITAL WELDING SOLUTIONS

OPEN WELD HEADS SATO 220 FUSION / FUSION + WIRE

0.4 - 8.625" o/d / 10 - 220 mm o/d

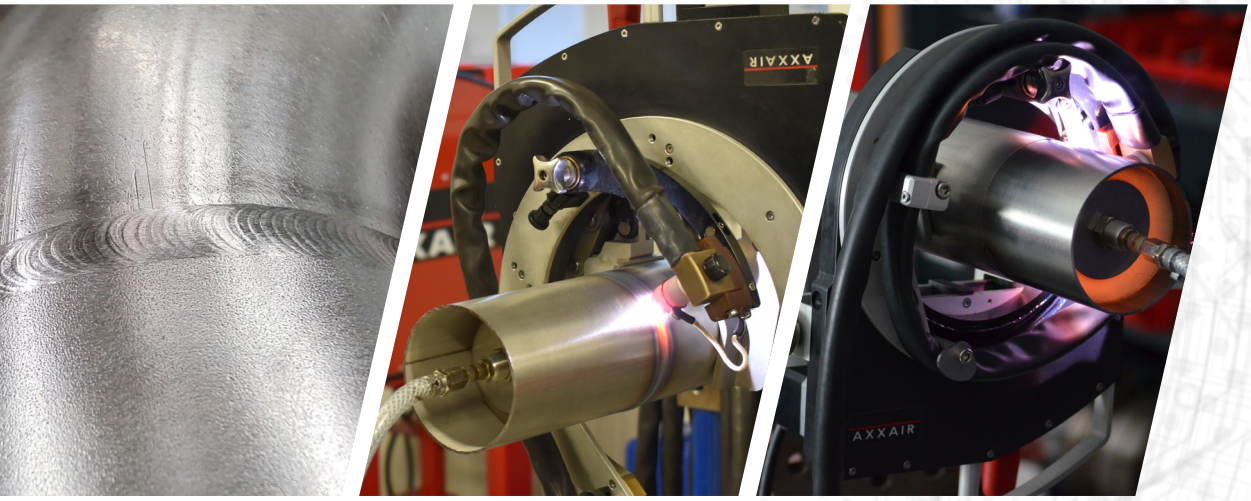

SCAN QR CODE
TO WATCH VIDEO

AXXAIR
AN SPG GROUP BRAND

www.AXXAIR.com

OPEN ORBITAL WELD HEADS SATO-220 (FUSION / FUSION + WIRE)

1.5 - 8.625" o/d / 38 - 220 mm o/d

Combine with Pipe Purge Masters (PPM) solutions

- **Function:** Orbital TIG welding
- **Materials:** Any kind of steel and exotic alloys
- **Powered by the SAXX power source**

Water cooled

Air cooled

With its compact design, the SATO 220 open welding head (1.5 – 8.625" O/D / 38 – 220 mm O/D) allows for very high-quality welds to be achieved in minimal space. It is mainly recommended for the power generation, chemical, and petrochemical sectors, for wall thicknesses less than and greater than 3 mm.

The SATO 220 offers a wide range of welding possibilities thanks to torch tilting and the optional addition of filler metal. It can also be used with oscillation (OSC) and arc voltage control (AVC).

MAIN FEATURES

- Small rotation sweep from the center of the tube
- Quick symmetrical tightening by lever
- Mechanical o/d tracking: constant arc distance without scratching the tube
- Inclination and axial adjustment of the electrode

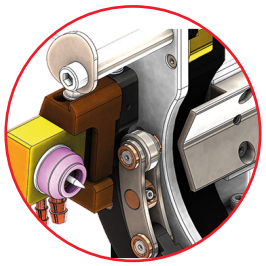

MARK FREE ROLLER TRACKING
Constant arc voltage without scratching the tube

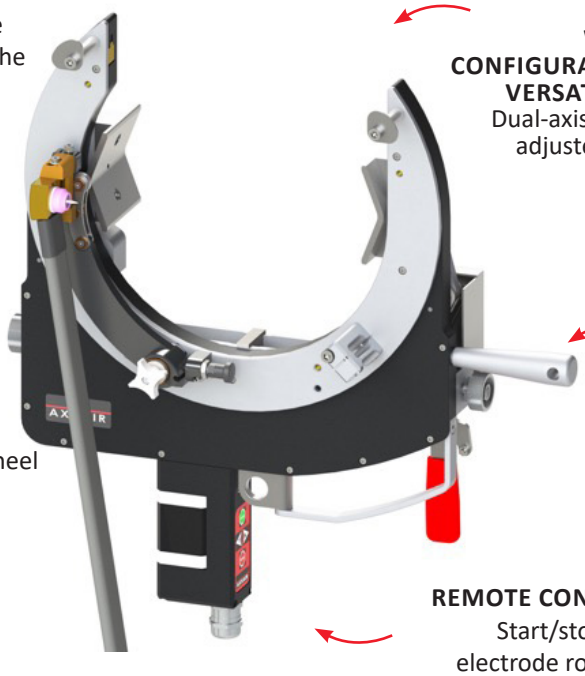

WELD CONFIGURATION VERSATILITY
Dual-axis torch adjustement

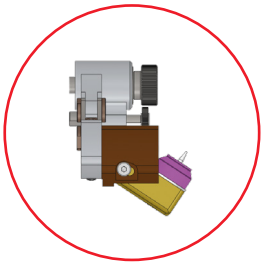

PRECISE AXIAL ALIGNEMENT OF THE ELECTRODE
thanks to the starwheel

ADJUSTABLE HANDLE

REMOTE CONTROL
Start/stop and electrode rotation

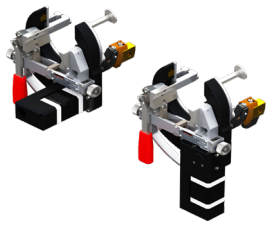

TWO VERSIONS AVAILABLE:
straight or angled motor

SATO-220 TECHNICAL FEATURES

DESCRIPTION	MEAS.	WATER COOLED TORCH		AIR COOLED TORCH	
MOTOR	-	STRAIGHT MOTOR	ANGLED MOTOR	STRAIGHT MOTOR	ANGLED MOTOR
Part No.	-	SATO-220E41	SATO-220E42	SATO-220E43	SATO-220E44
Tube OD range	mm (o/d)	38 - 220		38 - 220	
	inch (o/d)	1.5 - 8.625		1.5 - 8.625	
100% duty cycle	A	200		100	
Diameter electrode	mm	1.6 or 2.4		1.6 or 2.4	
	inch	1/16 or 3/32		1/16 or 3/32	
Cooling system	-	Yes		No	
Maximum operating temperature	°C	40		40	
	°F	104		104	
Unit weight	kg	9.4		9.4	
	lbs	20.7		20.7	

DIMENSIONS (MM/INCH)

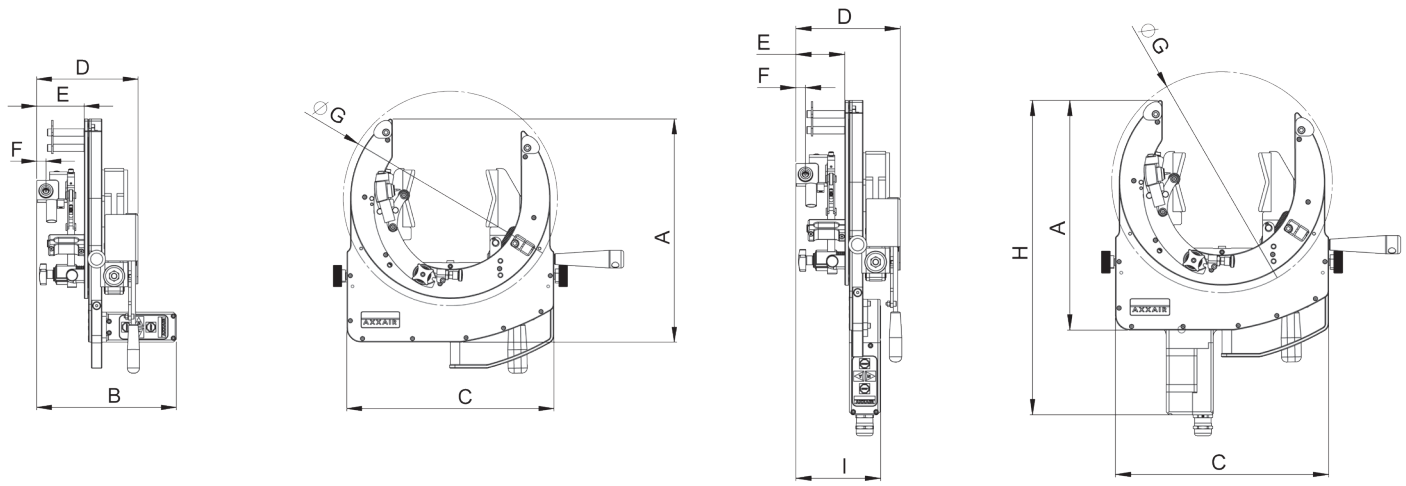

DIM (MM)	A	B	C	D	E	F	G	H	I
SATO-220	353 mm 13.9"	186 - 196 mm 7.2 - 7.72"	350 mm 13.8"	133 - 143 mm 5.2 - 5.6"	57 - 67 mm 2.2 - 2.6"	13 mm 0.5"	350 mm 13.8"	451 mm 17.7"	113 - 121 mm 4.4 - 4.8"

POWER SOURCE

SAXX-201

Orbital TIG welding power source
200A, 110 - 220v
with or without cooling system

SAXX-200

Orbital TIG welding power source
200A, 110 - 220v
with or without cooling system

SAXX-210

Orbital TIG welding power source
210A, 110 - 220v

SAXX-300

Orbital TIG welding power source
300A, 400v

ACCESSORIES

PURGING KITS

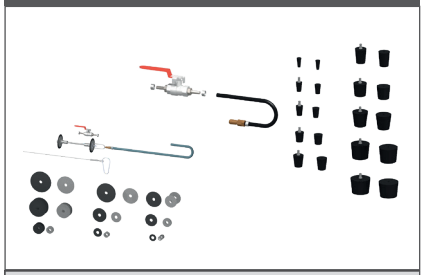

PART NO. SKIF-01 / SKIB-01

WIRE GUIDE

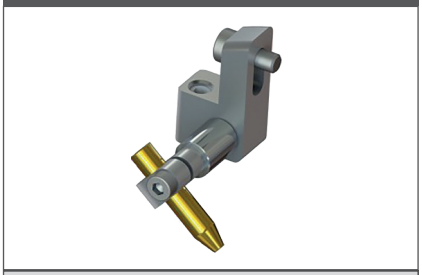

PART NO. SATOB-02B

WIRE FEEDER

PART NO. SADF2X

LEAD EXTENSION

5 or 10
meters

See Accessories & consumables for SATO

DELIVERY & STORAGE

Delivered in a shockproof case,
waterproof and dustproof

PPM PIPE PURGE MASTERS
AN GGG GROUP BRAND

Discover also all Pipe Purge Masters (PPM) accessories for purging solutions!
www.PURGEMASTERS.com

CONSUMABLES

ELECTRODES

Diameter 1.6 or 2.4 mm / 1/16 or 3/32"

PART NO. SCE16-50 / SCE24-50

SPARE PARTS KIT

PART NO. SKTO-01

ORBITAL WELDING SOLUTIONS

OPEN WELD HEADS SATO WITH AVC/OSC SYSTEM

0.75 - 8.625" o/d / 19 - 220 mm o/d

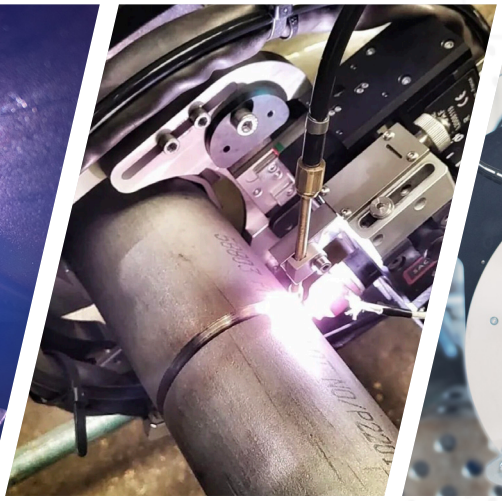

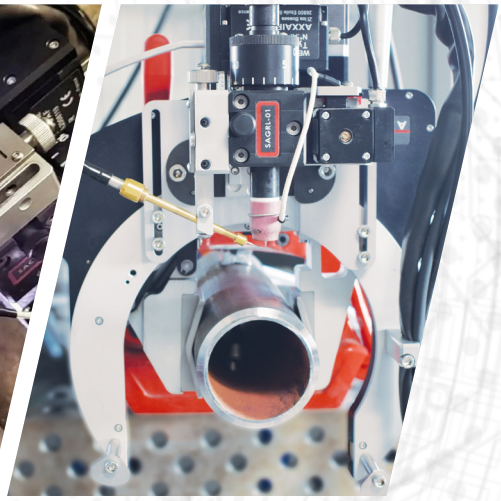

AXXAIR
AN SPG GROUP BRAND

www.AXXAIR.com

OPEN ORBITAL WELD HEADS SATO (AVC/OSC SYSTEM)

0.4 - 8.625" o/d / 10 - 220 mm o/d

Combine with Pipe Purge Masters (PPM) solutions

- **Function:** Orbital TIG welding with AVC/OSC system
- **Materials:** Any kind of steel and exotic alloys
- **Powered by the SAXX power source**

Water cooled

With its compact design, the range of open welding heads (SATO series) allows to achieve very high-quality welds in minimal space. Open heads are mainly recommended for the power generation, chemical and petrochemical sectors, for wall thicknesses less than 12.7mm / 0.5" and greater than 3 mm / 0.120". They can be used with or without wire, and also with oscillation (OSC) and arc distance control (AVC).

SATO-115 AVC/OSC

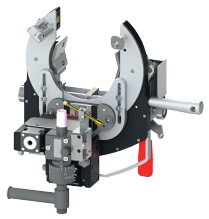

SATO-170 AVC/OSC

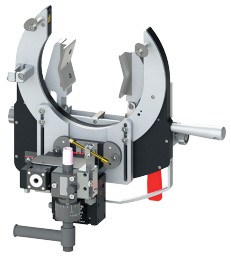

SATO-220 AVC/OSC

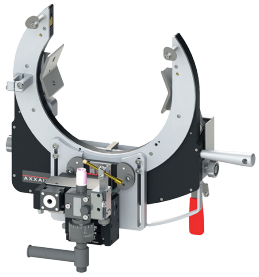

MAIN FEATURES

- Small rotation sweep from the center of the tube
- Quick symmetrical tightening by lever
- Oscillation range: 20 mm / 0.78", AVC range: 20 mm / 0.78", max speed: 15 mm/s / 0.59"/s

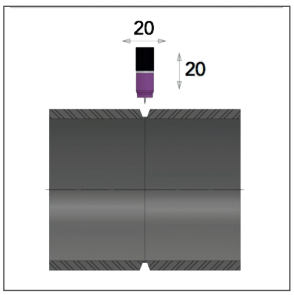

MODEL	TUBE O/D RANGE		WATER COOLED TORCH	
			STRAIGHT MOTOR	ANGLED MOTOR
SATO-115 AVC/OSC	19 - 115 mm	0.75 - 4.5"	SATO-115E51	SATO-115E52
SATO-170 AVC/OSC	25 - 170 mm	1 - 6.625"	SATO-170E51	SATO-170E52
SATO-220 AVC/OSC	38 - 220 mm	1.5 - 8.625"	SATO-220E51	SATO-220E52

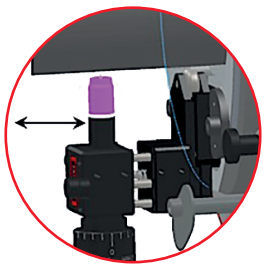

MULTI-PASS WELDING
Motorized axial sweep (OSC)
Movement of the electrode's axial position +/- 10 mm / 0.39"

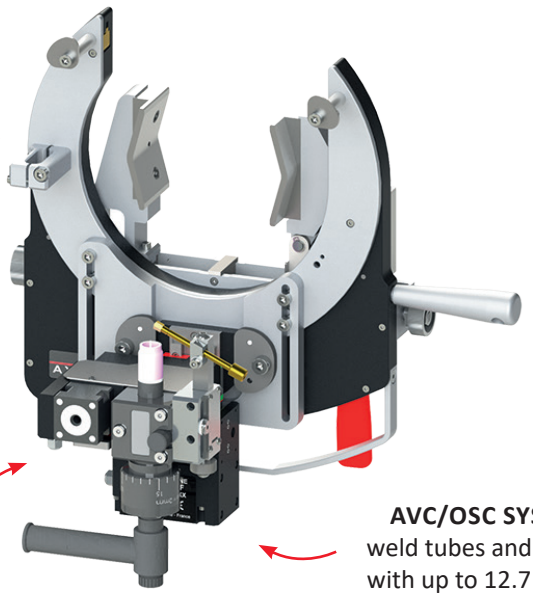

CONSTANT DISTANCE ELECTRODE-TUBE
motorized setting and control of the distance tube-electrode (AVC) regulates the arc voltage, the distance between the electrode and the tube

ADJUSTABLE HANDLE

AVC/OSC SYSTEM
weld tubes and pipes with up to 12.7 mm / 0.500" wall thickness

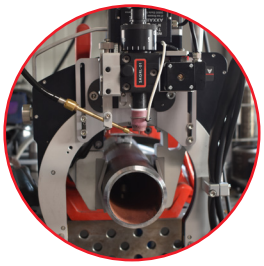

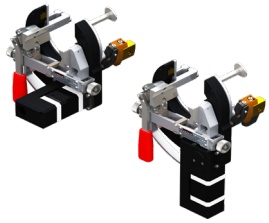

TWO VERSIONS AVAILABLE:
straight or angled motor

TECHNICAL FEATURES (liquid cooled)

DESCRIPTION	MEAS.	SATO-115 AVC/OSC		SATO-170 AVC/OSC		SATO-220 AVC/OSC	
MOTOR	-	STRAIGHT MOTOR	ANGLED MOTOR	STRAIGHT MOTOR	ANGLED MOTOR	STRAIGHT MOTOR	ANGLED MOTOR
Part No.	-	SATO-115E51	SATO-115E52	SATO-170E51	SATO-170E52	SATO-220E51	SATO-220E52
Diameter range	mm (o/d)	19 - 115		25 - 170		38 - 220	
	inch (o/d)	0.75 - 4.5		1 - 6.625		1.5 - 8.625	
100% duty cycle	A	200		200		200	
Diam electrode	mm	1.6 or 2.4		1.6 or 2.4		1.6 or 2.4	
	inch	1/16 or 3/32		1/16 or 3/32		1/16 or 3/32	
Cooling system	-	Yes		Yes		Yes	
Max operating temperature	°C	40		40		40	
	°F	104		104		104	
Unit weight	kg	10.6		12.7		15.1	
	lbs	22		26.5		33.1	

DIMENSIONS (mm/inch)

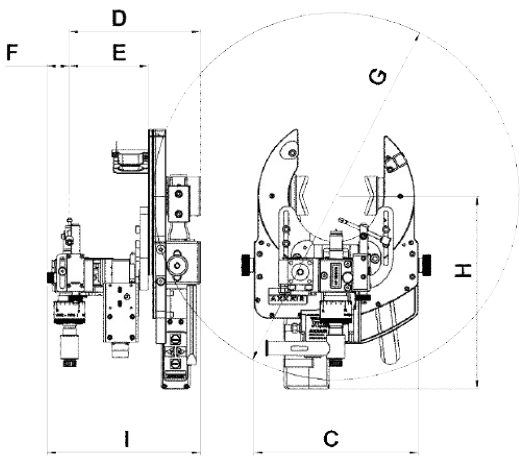

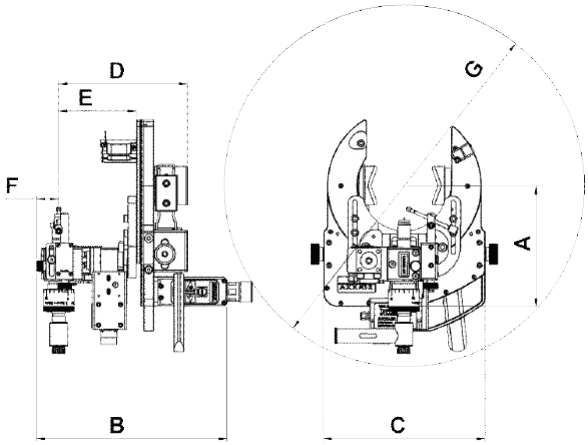

DIM (MM)	A	B	C	D	E	F	G	H	I
SATO-115	171 mm 6.7"	246 - 271 mm 9.7 - 10.7"	230 mm 9"	146 - 171 mm 5.7 - 6.7"	85 - 110 mm 3.3 - 4.3"	31.5 mm 1.2"	680 mm 26.8"	269 mm 10.6"	194 - 219 mm 7.6 - 8.6"
SATO-170	201 mm 7.9"	246 - 271 mm 9.7 - 10.7"	290 mm 11.4"	146 - 171 mm 5.7 - 6.7"	85 - 110 mm 3.3 - 4.3"	31.5 mm 1.2"	750 mm 29.5"	299 mm 11.8"	194 - 219 mm 7.6 - 8.6"
SATO-220	220 mm 8.7"	246 - 271 mm 9.7 - 10.7"	350 mm 13.8"	146 - 171 mm 5.7 - 6.7"	85 - 110 mm 3.3 - 4.3"	31.5 mm 1.2"	800 mm 31.5"	318 mm 12.5"	194 - 219 mm 7.6 - 8.6"

WHAT IS AVC/OSC?

MOTORISED ARC VOLTAGE CONTROL: AVC

The motorized arc voltage control, commonly known as AVC (Arc Voltage Control), relates to the distance between the tube and the electrode. This option ensures a consistant tube-electrode distance by adjusting automatically the tension of the arc during welding. AVC is an important feature, particularly for multipass orbital TIG welding processes as it provides more precision and consistency allowing better quality welds.

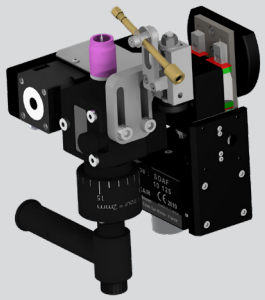

The two most common applications:

- When you do not want to mechanically gauge the outer diameter, AVC requires no contact with the tube, and the sensor is more precise and responsive than mechanical tracking.
- When welding with filler wire and the deposition rate under the electrode is not perfectly controlled, which of course affects the arc height. In this case, AVC ensures that the weld pool is never touched.

ORBITAL TIG WELDING WITH AVC + OSC + WIRE:

Mechanized multipass pipe welding combines automatic Arc Voltage Control, oscillation of the torch and adding filler material. It is used when welding thicker wall pipe which requires several passes to fill a bevelled joint with wire. It usually consists in a root pass, one or several filling passes depending on the thickness and the preparation, and a cap pass. While filling out the joint with wire, the torch oscillates sweeping the electrode within the joint from left to right while also moving around the pipe at a constant travel speed. A constant oscillation allows a more efficient wire deposition and more consistent fusion of the material on each side of the joint.

An orbital TIG welding system with AVC + OSC + wire is the most effective and efficient solution to fill a J-prep configuration in multipass TIG welding.

POWER SOURCE

SAXX-210 AVC/OSC

Orbital TIG welding power source
210A, 110 - 220v

SAXX-300 AVC/OSC

Orbital TIG welding power source
300A, 400v

ACCESSORIES

PURGING KITS

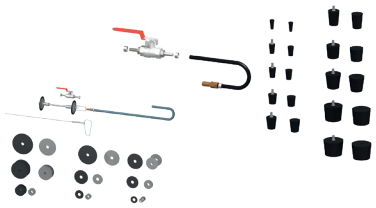

PART NO. SKIF-01 / SKIB-01

WIRE FEEDER

PART NO. SADF2X

LEAD EXTENSION WITH AVC/OSC

10 meters / 32.8 ft

WATER COOLING

PART NO. SAFS-10MOSC

DELIVERY & STORAGE

Delivered in a shockproof case,
waterproof and dustproof

PPM PIPE PURGE MASTERS
AN OTT GROUP BRAND

Discover also all Pipe Purge Masters (PPM) accessories for purging solutions!
www.PURGEMASTERS.com

CONSUMABLES

ELECTRODES

Diameter 1.6 or 2.4 mm / 1/16 or 3/32"

PART NO. SCE16-50 / SCE24-50

SPARE PARTS KIT

PART NO. SKTD-02

* XX = OUTSIDE DIAMETER
* XXX = MODEL SATO-115 / SATO-170 / SATO-220

ORBITAL WELDING

OPEN WELD HEADS SATO RANGE

Accessories & consumables

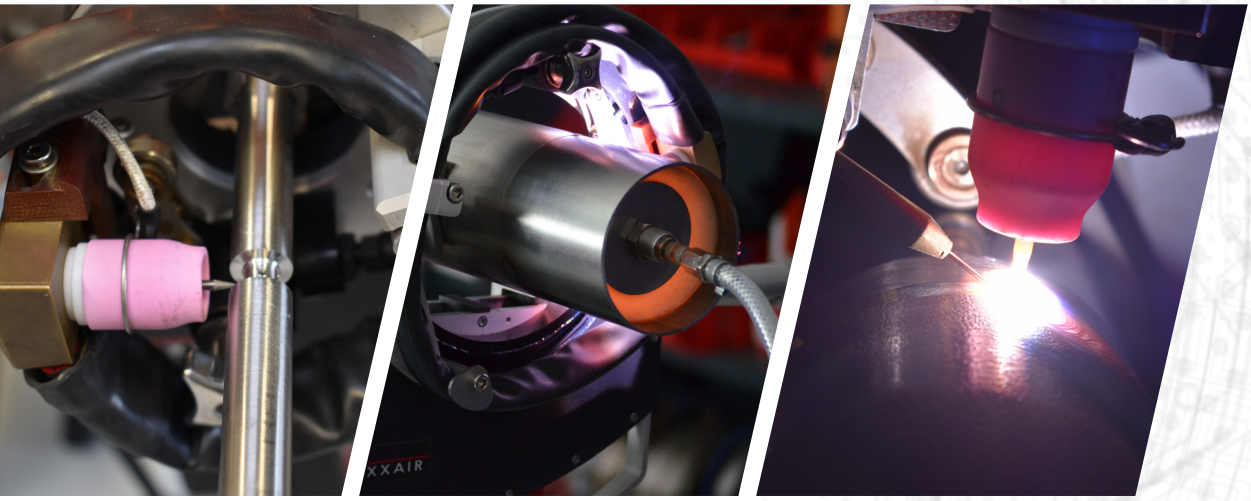

AXXAIR
AN SPG GROUP BRAND

www.AXXAIR.com

GAS PLUG PURGING KIT

Facilitates and accelerates inerting. Avoids the use of adhesive paper.

Consisting of: 10 sets of perforated plugs, 1 gas inlet connector,
1 hose Ø ⅝ length 5 metres, 1¼ turn gas valve

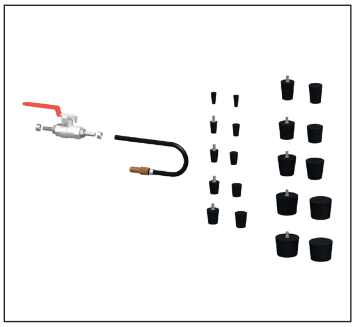

PART NO.	DESCRIPTION	WEIGHT		PACKAGING DIMENSIONS	
SKIB-01	Gas plug purging kit for tubes or Ø 6 to 41 mm	1.7 kg	3.75 lbs	35 x 30 x 9.5 cm	13.8 x 11.8 x 3.7"

GAS MEMBRANE PURGING KIT

Inerting tubes in the area to be welded before and during welding minimises gas consumption.

Consisting of: 9 sets of membranes with washers, 1 gas hose 6 m,
1 metal cable, 1¼ turn gas valve, 1 carabiner

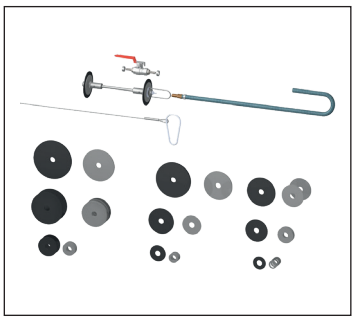

PART NO.	DESCRIPTION	WEIGHT		PACKAGING DIMENSIONS	
SKIF-01	Gas membrane purging kit for tubes Ø 40 to 120 mm	4.5 kg	9.92 lbs	35 x 30 x 9.5 cm	13.8 x 11.8 x 3.4"

PPM PIPE PURGE MASTERS

Please refer to the Pipe Purge Masters (PPM) brochure for more purging solutions.
www.PURGEMASTERS.com

LEAD EXTENSION

Cable extensions are available to increase the operating distance between the welding head and the SAXX power source.

The choice of the cable is made according to the cooling of the torch (water or air) and with or without filler metal.

WITHOUT WIRE

PART NO.	DESCRIPTION	WEIGHT		PACKAGING DIMENSIONS	
SAFS-05MX	5m / 16.4 ft extension cable Water cooling - without wire	7 kg	15.4 lbs	40 x 59 x 25 cm	16 x 23 x 10"
SAFS-10MX	10 m / 32.8 ft extension cable Water cooling - without wire	14 kg	30.9 lbs	40 x 59 x 25 cm	16 x 23 x 10"
SAFS-05MAX	5m / 16.4 ft extension cable Air cooling - without wire	7 kg	15.4 lbs	40 x 59 x 25 cm	16 x 23 x 10"
SAFS-10MAX	10 m / 32.8 ft extension cable Air cooling - without wire	13 kg	28.7 lbs	40 x 59 x 25 cm	16 x 23 x 10"

WITH WIRE

PART NO.	DESCRIPTION	WEIGHT		PACKAGING DIMENSIONS	
SAFS-05MXF	5m / 16.4 ft extension cable water cooling - with wire	7 kg	15.4 lbs	40 x 59 x 25 cm	16 x 23 x 10"
SAFS-10MXF	10 m / 32.8 ft extension cable water cooling - with wire	14 kg	30.9 lbs	40 x 59 x 25 cm	16 x 23 x 10"
SAFS-05MAXF	5m / 16.4 ft extension cable air cooling - with wire	7 kg	15.4 lbs	40 x 59 x 25 cm	16 x 23 x 10"
SAFS-10MAXF	10 m / 32.8 ft extension cable air cooling - with wire	13 kg	28.7 lbs	40 x 59 x 25 cm	16 x 23 x 10"

WIRE WITH AVC/OSC

PART NO.	DESCRIPTION	WEIGHT		PACKAGING DIMENSIONS	
SAFS-10MOSC	10 m / 32.8 ft extension cable **Water cooling - with wire with AVC /OSC**	14 kg	30.9 lbs	40 x 59 x 25 cm	16 x 23 x 10"

WIRE GUIDE (ONLY FOR SATO WITH SIMPLE WIRE)

PART NO.	DESCRIPTION	WEIGHT		PACKAGING DIMENSIONS	
SATOB-02B	Dual-axis wire guide	0.05 kg	0.11 lbs	51 x 90 x 65 mm	2 x 3.5 x 2.6"

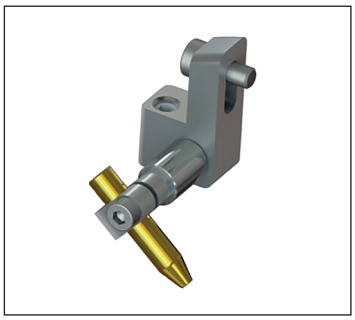

WIRE FEEDER (FOR SAXX)

- Cable length 5 m max / 16 ft
- Supplied with SAXX power source-connection cable and teflon sheath to guide the wire
- Drive pressure adjusted by adjustable spring, with handle.

PART NO.	DESCRIPTION	WEIGHT		DIMENSIONS	
SADF2X	External wire feeder for SAXX	12 kg	26 lbs	59.7 x 38.4 x 24 cm	23.5 x 15.1 x 9.4"

AXXAIR
INNOVATIVE ORBITAL SOLUTIONS

OPEN ORBITAL WELD HEADS SATO: CONSUMABLES

ELECTRODES

- Tungsten electrodes
- AXXAIR's electrodes are specifically sharpened at 20° with a flat

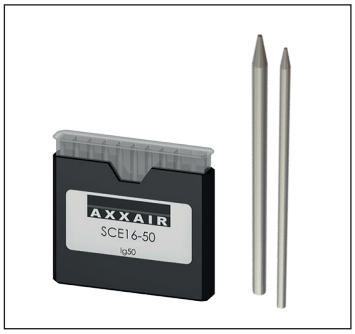

PART NO.	DIAMETER ELECTRODES	DESCRIPTION	WEIGHT		DIMENSIONS	
SCE16-50	1.6 mm 1/16"	Box of 10 tungsten electrodes, diameter 1.6 mm (1/16"), length 50 mm	0.02 kg	0.044 lbs	5.5 x 4.5 x 1 cm	1.97 x 1.57 x 0.39"
SCE24-50	2.4 mm 3/32"	Box of 10 tungsten electrodes diameter 2.4 mm (3/32"), length 50 mm	0.05 kg	0.11 lbs	5.5 x 4.5 x 1 cm	1.97 x 1.57 x 0.39"

SPARE PARTS KITS

FOR SATO FUSION / SIMPLE WIRE

Spare part kit consists of: 4 long nozzles and 2 short nozzles, 4 electrode clamps, 20 electrodes, Ø 1.6 and 20 Ø 2.4 electrodes, 2 teflon rings, 1 short cap type 9/20 and 1 FACOM screwdriver

PART NO.	DIAMETER ELECTRODES	DESCRIPTION	WEIGHT		DIMENSIONS (PLASTIC BOX)	
SKTO-01	1.6 or 2.4 mm 1/16 or 3/32"	Spare parts kit for straight torch diameter 1.6 mm or 2.4 mm	0.3 kg	0.66 lbs	12 x 17.5 x 4 cm	4.7 x 7 x 1.6"

FOR SATO WITH AVC/OSC

Spare part kit for straight torch consists of: 5 nozzles, 2 plugs 9/20, 2 long electrode clamps, 10 electrodes (diameter 2.4 mm) and 2 mesh diffusers

PART NO.	DIAMETER ELECTRODES	DESCRIPTION	WEIGHT		DIMENSIONS (PLASTIC BOX)	
SKTD-02	2.4 mm / 3⁄32"	Spare parts kit for straight torch diameter 2.4 mm	0.3 kg	0.66 lbs	12 x 17.5 x 4 cm	4.7 x 7 x 1.6"

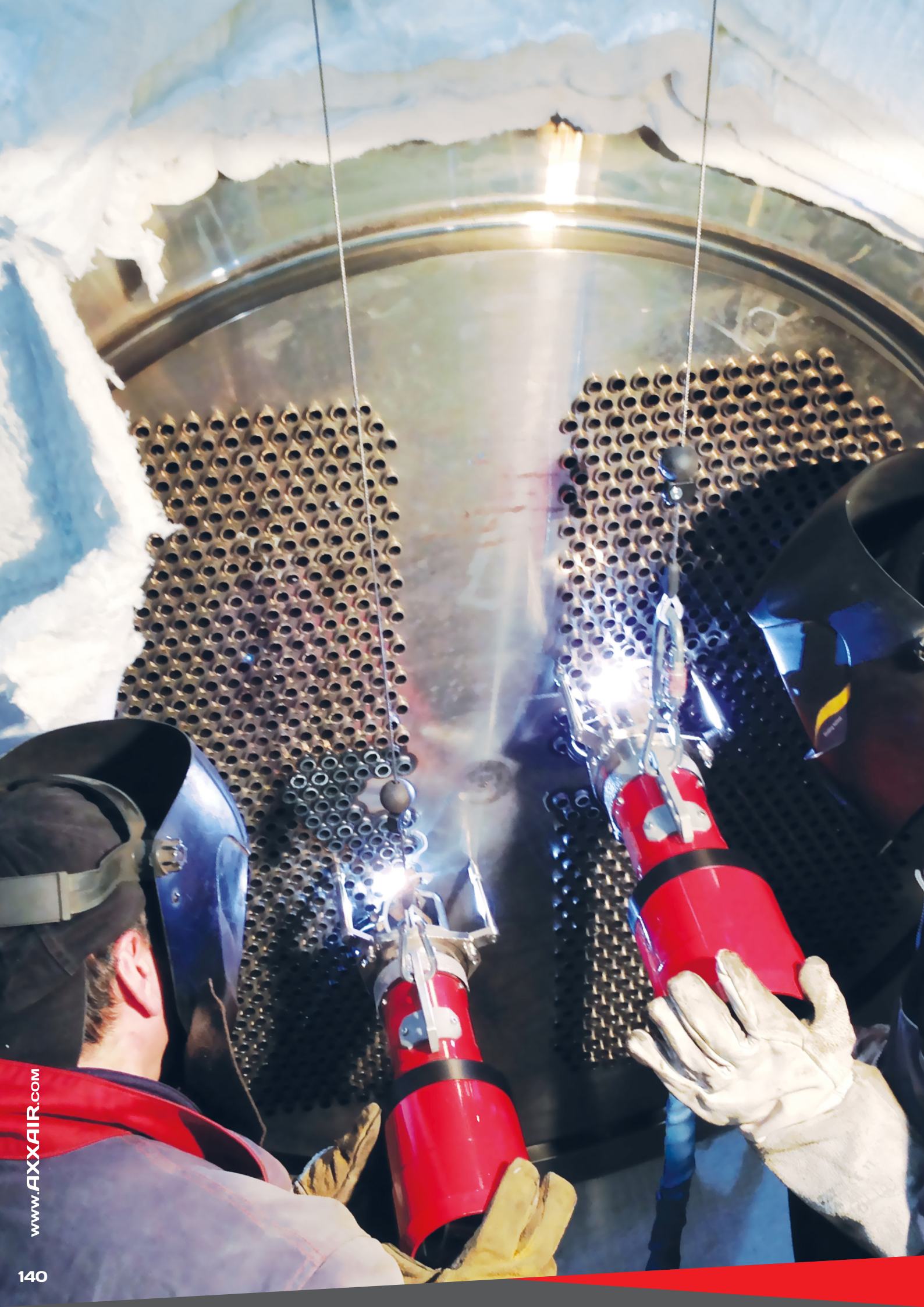

ORBITAL WELDING SOLUTIONS

TUBE-TO-TUBESHEET SATP

0.47 - 3.23" o/d / 12 - 82 mm o/d

AXXAIR
AN SPG GROUP BRAND

www.AXXAIR.com

TUBE-TO-TUBESHEET SATP

0.47 - 3.23" o/d / 12 - 82 mm o/d

Water cooled

- **Function:** Orbital TIG welding
- **Materials:** Any kind of steel and exotic alloys
- **Powered by the SAXX power source**

The SATP tube-to-tubesheet welding head, fully water-cooled, is designed for heat exchanger production across various industries such as aeronautics, agri-food, and energy production.

Heat exchangers are increasingly crucial in these sectors, and our welding head provides economical, reliable, and high-quality assembly of tubes to plates. The SATP-80X accommodates nearly all common tube-to-tube sheet configurations in stainless steel, titanium, and black steel.

MAIN FEATURES

- Tilting water cooled head
- Built-in rotating wire dispenser
- Specific mandrel with ball centering pushed by springs: precise positioning and quick installation

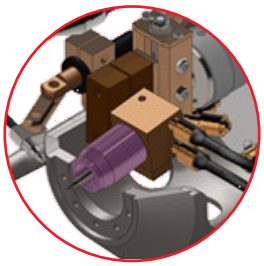

TILTING HEAD
Water cooled with tilting wire

WIRE HOLDER
1 kg

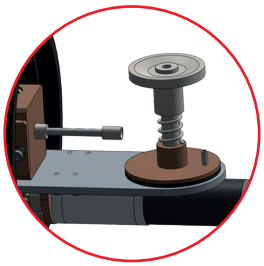

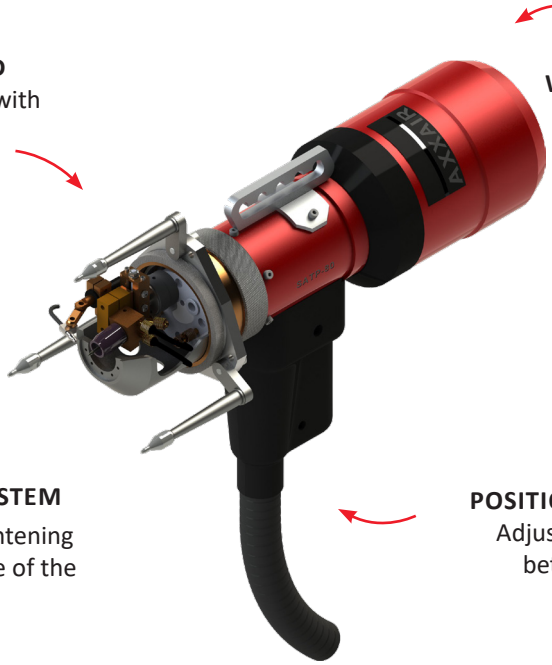

FLEXIBILITY
Head and wire adjustment trolley

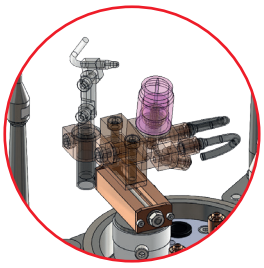

MANDREL SYSTEM
Concentric tightening from the inside of the tube

POSITIONING STOPS
Adjustable stops for better tube sheet stability

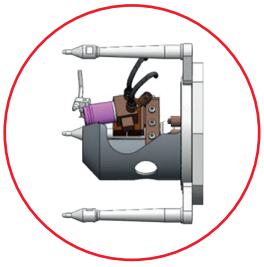

TECHNICAL FEATURES

PART NO.	SATP-80X
DESCRIPTION	Tube to tubesheet welding head supplied with wire dispenser
TUBE OUTSIDE DIAMETER	12 - 82 mm
	0.47 - 3.23"
TUBE INSIDE DIAMETER	10 - 78 mm
	0.39 - 3.07"
ELECTRODE DIAMETER	2.4 mm / 3⁄32
WEIGHT (WITHOUT REEL)	7.5 kg / 16.5 lbs
WIRE FEEDING	Diameter: 0.8mm (0.03") Maximum speed: 200 cm/min (78.7" / min) Spool: D100 (1 kg / 2.2 lbs)
MAX WELDING CURRENT	200 A
OPERATING TEMPERATURE	+0°C / + 40 °C (32°F / 104°F)

DIMENSIONS (MM/INCH)

DIM	SATP-80X	
A	451 mm	17.7"
B	182 mm	7.2"
C	210 mm	8.3"

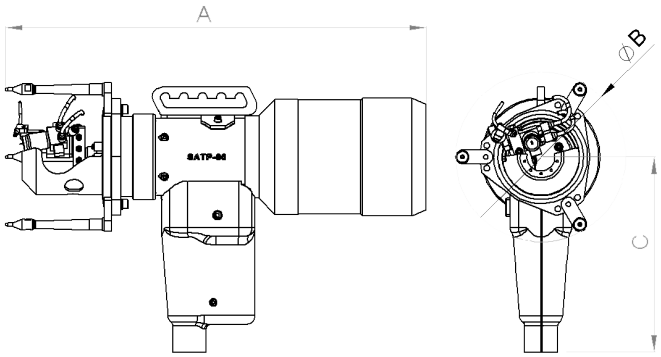

POWER SOURCE

SAXX-201

Orbital TIG welding power source
200A, 110 - 220v
with cooling system

SAXX-200

Orbital TIG welding power source
200A, 110 - 220v
with cooling system

SAXX-210

Orbital TIG welding power source
210A, 110 - 220v

SAXX-300

Orbital TIG welding power source
300A, 400v

- 3 tube-to-tube sheet welding configurations
- Outside diameter of the straight torch tube: 12 - 82 mm
- External diameter of the tube **if torch tilted at 30°:** 12 - 40 mm

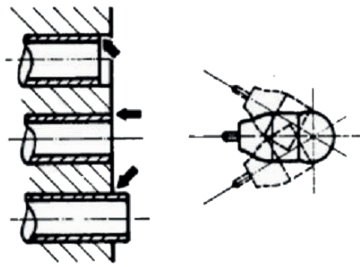

MANDRELS

The mandrel used must be chosen according to the inner diameter of the tube to be welded to the tubesheet.

Depending on the mandrel used, it will be necessary to choose the compatible spindle.

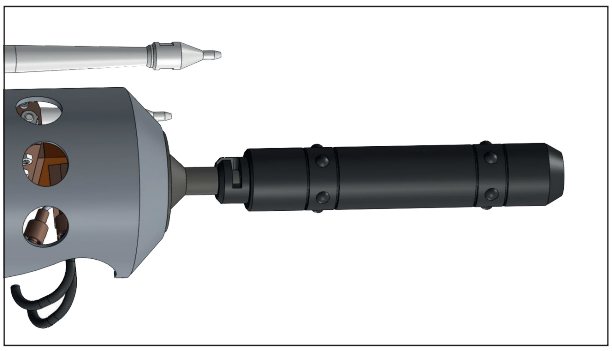

PART NO.	RANGE MM / INCH (I/D)		DESCRIPTION	ON SPINDLE
SATP-M11	9.8 - 10.3 mm	0.38 - 0.40"	Centering mandrels, for range 9.8 up to 10.3 mm	SATP-B01
SATP-M12	10.3 - 10.8 mm	0.40 - 0.42"	Centering mandrels, for range 10.3 up to 10.8 mm	
SATP-M13	10.8 - 11.3 mm	0.42 - 0.44"	Centering mandrels, for range 10.8 up to 11.3 mm	
SATP-M14	11.3 - 11.8 mm	0.44 - 0.46"	Centering mandrels, for range 11.3 up to 11.8 mm	
SATP-M15	11.8 - 12.3 mm	0.46 - 0.48"	Centering mandrels, for range 11.8 up to 12.3 mm	
SATP-M16	12.3 - 13.0 mm	0.48 - 0.51"	Centering mandrels, for range 12.3 up to 13.0 mm	
SATP-M21	12.8 - 14.0 mm	0.50 - 0.55"	Centering mandrels, for range 12.8 up to 14.0 mm	SATP-B02
SATP-M22	13.8 - 15.0 mm	0.54 - 0.59"	Centering mandrels, for range 13.8 up to 15.0 mm	
SATP-M23	14.8 - 16.0 mm	0.58 - 0.63"	Centering mandrels, for range 14.8 up to 16.0 mm	
SATP-M24	15.8 - 17.0 mm	0.62 - 0.67"	Centering mandrels, for range 15.8 up to 17.0 mm	
SATP-M25	16.8 - 18.0 mm	0.66 - 0.71"	Centering mandrels, for range 16.8 up to 18.0 mm	
SATP-M26	17.8 - 19.0 mm	0.70 - 0.75"	Centering mandrels, for range 17.8 up to 19.0 mm	
SATP-M27	18.8 - 20.5 mm	0.74 - 0.80"	Centering mandrels, for range 18.8 up to 20.5 mm	
SATP-M28	19.8 - 22.5 mm	0.78 - 0.88"	Centering mandrels, for range 19.8 up to 22.5 mm	
SATP-M29	22.3 - 24.8 mm	0.88 - 0.98"	Centering mandrels, for range 22.3 up to 24.8 mm	SATP-B03
SATP-M30	24.5 - 27.0 mm	0.96 - 1.06"	Centering mandrels, for range 24.5 up to 27.0 mm	
SATP-M31	26.5 -29.0 mm	1.04 - 1.14"	Centering mandrels, for range 26.5 up to 29.0 mm	
SATP-M32	28.5 - 31.0 mm	1.12 - 1.22"	Centering mandrels, for range 28.5 up to 31.0 mm	
SATP-M33	30.5 - 33.0 mm	1.20 - 1.30"	Centering mandrels, for range 30.5 up to 33.0 mm	
SATP-M34	32.5 - 36.0 mm	1.28 - 1.42"	Centering mandrels, for range 32.5 up to 36.0 mm	
SATP-M35	35.5 - 39.0 mm	1.40 - 1.53"	Centering mandrels, for range 35.5 up to 39.0 mm	
SATP-M36	38.5 - 42.0 mm	1.51" - 1.65"	Centering mandrels, for range 38.5 up to 42.0 mm	
SATP-M37	41.5 - 45.0 mm	1.63 - 1.77"	Centering mandrels, for range 41,5 up to 45.0 mm	
SATP-M38	44.5 - 48.0 mm	1.75 - 1.89"	Centering mandrels, for range 44.5 up to 48.0 mm	
SATP-M39	47.5 - 51.0 mm	1.87 - 2.01"	Centering mandrels, for range 47.5 up to 51.0 mm	
SATP-M40	50.5 - 54.0 mm	1.99 - 2.12"	Centering mandrels, for range 50.5 up to 54.0 mm	SATP-B04
SATP-M41	53.5 - 58.0 mm	2.11 - 2.28"	Centering mandrels, for range 53.5 up to 58.0 mm	
SATP-M42	57.5 - 62.0 mm	2.24 - 2.44"	Centering mandrels, for range 57.5 up to 62.0 mm	
SATP-M43	61.5 - 66.0 mm	2.42 - 2.60"	Centering mandrels, for range 61.5 up to 66.0 mm	
SATP-M44	65.5 - 70.0 mm	2.58 - 2.75"	Centering mandrels, for range 65.5 up to 70.0 mm	
SATP-M45	69.5 - 74.0 mm	2.74 - 2.91"	Centering mandrels, for range 69.5 up to 74.0 mm	
SATP-M46	73.5 - 78.0 mm	2.89 - 3.07"	Centering mandrels, for range 73.5 up to 78.0 mm	

SPINDLES

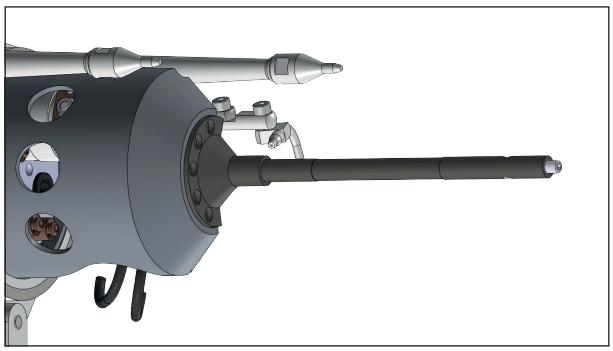

PART NO.	DESCRIPTION	FOR MANDREL
SATP-B01	Spindle size 1 for mandrel M11 up to M16	M11 to M16
SATP-B02	Spindle size 2 for mandrel M21 up to M28	M21 to M28
SATP-B03	Spindle size 3 for mandrel M29 up to M39	M29 to M39
SATP-B04	Spindle size 4 for mandrel M40 up to M46	M40 to M46

AXXAIR
INNOVATIVE ORBITAL SOLUTIONS

TUBE-TO-TUBESHEET SATP: CONSUMABLES

ELECTRODES

- Tungsten electrodes
- AXXAIR's electrodes are specifically sharpened at 20° with a flat

PART NO.	DESCRIPTION	NET WEIGHT		PLASTIC BOX (CM/INCH)	
SCE24-39.5	Pre-ground tungsten electrode diameter 2.4 mm / 3/32" length 39.5 mm (per 10)	0.05 kg	0.11 lbs	5.5 x 4.5 x 1	2.0 x 1.6 x 0.4"

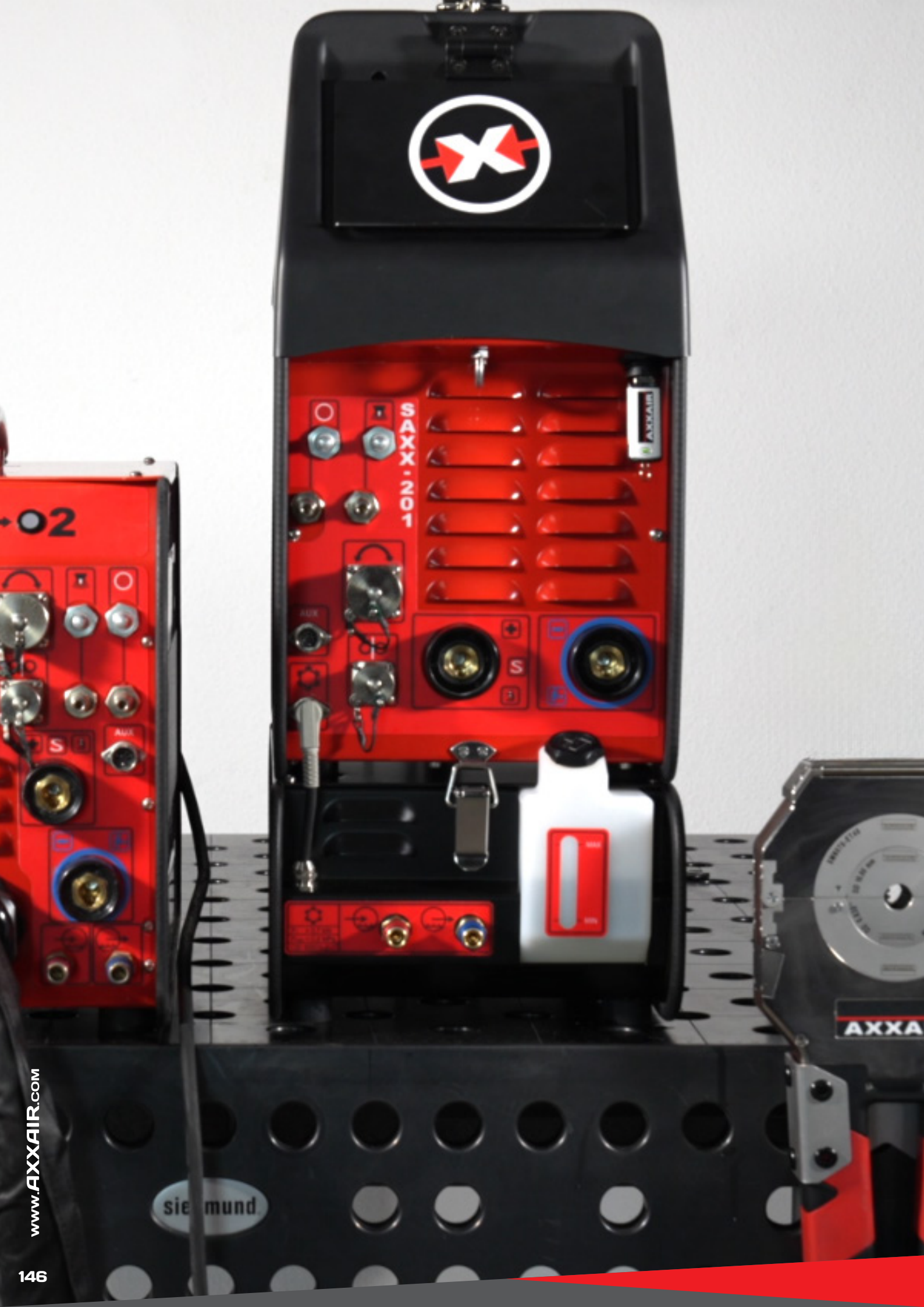
SAXX-201
AXXAIR
AUX
S
AXXA
siegmund

ORBITAL WELDING SOLUTIONS

POWER SOURCE SAXX 201

SCAN QR CODE
TO WATCH VIDEO

AXXAIR
AN SPG GROUP BRAND

www.AXXAIR.com

POWER SOURCE: SAXX-201

MAIN FEATURES

New generation, easy-to-use orbital TIG power source with simple, intuitive programming, full data acquisition and weld head & internal purge gas monitoring.

The SAXX-201's intuitive interface, allows full access to and control of all the functions required to perform the most demanding welds with ease and consistency. Welding programmes can be created in just a few steps, simplified by the self-calculating parameter system.

INTUITIVE PROGRAMMING

- Automatic parameters calculation and programming assistance
- 7" color touch screen
- Multilingual menu
- 3 users' levels (operator, welder and administrator)

COMPACT & EASY TO TRANSPORT

- Carrying handle and strap
- Screen protector

INTEGRATED PRINTER

Printing programs and actual parameters

DATA ACQUISITION ON USB KEY

- Record welding programs and users profiles
- The system monitors and saves welding parameters each second
- Data can be viewed directly on the screen or via the supplied 'WeldData' software, which can be converted to WPS format

OPTIONS
2 INDEPENDENT GAS LINES WITH FLOW MANAGEMENT Welding torch, and optional internal gas flow control
WIRE FEEDER CONNECTOR
DETACHABLE WATER COOLING UNIT Cooling capacity 700W, flow mini alarm. Can be separated without tools and makes the power source extremely portable

Water cooled

REMOTE CONTROL & DATA MONITORING

via Ethernet cable, via WiFi with smartphone/tablet, via **wired pendant** **(optional accessory)**

COMPATIBLE WITH ALL AXXAIR WELDING MACHINES and most welding machines on the market (AMI, Polysoude, ESAB, Orbitec, Orbitalum, and MK product) thanks to adapter kits *(see accessories)*.

TECHNICAL FEATURES

DESCRIPTION	Orbital TIG welding power source, 200A, autoline
WELDING CURRENT TYPE	DC
SUPPLY VOLTAGE	Single phase main with ground, 110 to 230 V+/- 15%, 50/60Hz
DUTY CYCLE	25% - 200A at 230V | 35% - 140A at 110V 100% - 115A at 230V | 100% - 100A at 110V
IP STANDARD	IP21
DATA ACQUISITION	USB key
ALARMS	Arc voltage sensors, gas flow sensors, cooling liquid sensors, inverter operation alarm, motorizations alarm (machine and wire feeder)
SCREEN SIZE	7"
LANGUAGES	French, English, German, Spanish, Italian, Russian, Chinese, Korean, Japanese, Turkish, Dutch, Polish, Portuguese, Slovak and Hungarian
INDUSTRY 4.0 CONNECTIONS	Ethernet port - **WiFi in option**

PRODUCT CODES & OPTIONS

			OPTIONS					
PRODUCT CODE	COOLED	GAS LINE	SECOND GAS LINE	WIRE FEED	WIFI	NET WEIGHT		PICTURE
SAXX-201I	AIR	•			•	21 kg	*46.3 lbs*	
SAXX-201IW	AIR	•		•	•	21 kg	*46.3 lbs*	
SAXX-201DGI	AIR	•	•		•	21 kg	*46.3 lbs*	
SAXX-201DGIW	AIR	•	•	•	•	21 kg	*46.3 lbs*	
SCOOL-700	Water cooler unit (700W)	Essential to the use of all water cooled machines. Compatible with all SAXX models listed above.				8 kg	*17.6 lbs*	

CAUTION: The power source is delivered without coolant.
See SAXX power source Accessories & consumables to order the 3 liter can (SACW-C006).

DIMENSIONS

PRODUCT CODE	A		B		C	
SAXX-201I	468 mm	*22.1"*	249 mm	*9.7"*	482 mm	*19"*
SAXX-201IW						
SAXX-201DGI						
SAXX-201DGIW						
SCOOL-700	468 mm	*18.4"*	249 mm	*9.7"*	*146 mm*	*5.7"*

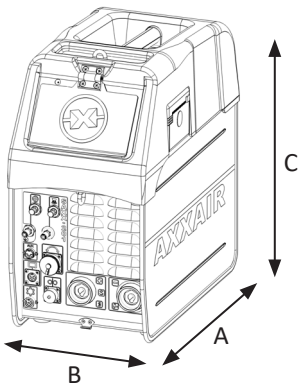

SAXX-201

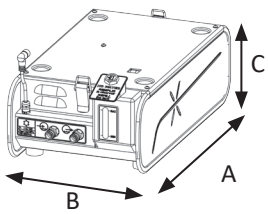

SCOOL-700

ACCESSORIES

WIRED REMOTE PENDANT

PART NO. SREM-1

CART ON WHEELS

With gas cylinder attachement

PART NO. SACG-X200

GAS SPLITTER PIPE

Allowing to connect 1 cylinder for torch and backgas monitoring

PART NO. SAFS-G01

HIGH PURITY GAS PIPE

Standard or splitter pipe

PART NO. SAFS-0700HP / SAFS-G01HP

SWITCHBOX

To use 2 weld heads with one power source

PART NO. SASW-DGW

WIRE FEEDER

PART NO. SADF2X

ADAPTER KITS

To connect former generation of AXXAIR weld heads and competitors' weld heads

See Accessories & consumables for SAXX

TIG MANUAL TORCH

PART NO. SATDMX-A/SATMX-E

CONSUMABLES

COOLING LIQUID

PART NO. SACW-CO06

PRINTER ROLLS

PART NO. SIMP-02

ORBITAL WELDING SOLUTIONS

POWER SOURCE SAXX 200

SCAN QR CODE
TO WATCH VIDEO

AXXAIR
AN SPG GROUP BRAND

www.AXXAIR.com

POWER SOURCE: SAXX-200

MAIN FEATURES

Orbital TIG welding power source, designed to be user friendly and intuitive to generate programs easily, with full data acquisition including measured control of shield and purge gas.

INTUITIVE PROGRAMMING

- Automatic parameters calculation and programming assistance
- 5.7" color touch screen
- Multilingual menu

COMPACT & EASY TO TRANSPORT

- Carrying handle

INTEGRATED PRINTER

Printing programs and actual parameters

DATA ACQUISITION ON USB KEY

- Record 200 welding programs
- The system monitors and saves welding parameters each second
- Data can be viewed on the supplied 'WeldReport' software, which can be converted to WPS format
- Update of the software via USB key

OPTIONS
2 INDEPENDENT GAS LINES WITH FLOW MANAGEMENT Welding torch, and optional internal gas flow control
WIRE FEEDER CONNECTOR
DETACHABLE WATER COOLING UNIT Cooling capacity 700W, flow mini alarm. Can be separated without tools and makes the power source extremely portable

REMOTE CONTROL AND DATA MONITORING

via Ethernet cable or via WiFi (option) with an App "Proface Remote HMI" to download on smartphone/tablet

Water cooled

COMPATIBLE WITH ALL AXXAIR WELDING MACHINES and most welding machines on the market (AMI, Polysoude, ESAB, Orbitec, Orbitalum, and MK product) thanks to adapter kits *(see accessories).*

TECHNICAL FEATURES

DESCRIPTION	Orbital TIG welding power source, 200A, autoline
WELDING CURRENT TYPE	DC
SUPPLY VOLTAGE	Single phase main with ground, 110 to 230 V+/- 15%, 50/60Hz
DUTY CYCLE	200A / 25% at 230V | 140A / 35% at 110 V 115A / 100% at 230V | 100A / 100% at 110V
IP STANDARD	IP21
DATA ACQUISITION	USB key
ALARMS	Arc voltage sensors, gas flow sensors, cooling liquid sensors, inverter operation alarm, motorizations alarm (machine and wire feeder)
SCREEN SIZE	5.7"
LANGUAGES	French, English, German, Spanish, Italian, Russian, Chinese, Korean, Japanese, Turkish, Dutch, Polish, Portuguese
INDUSTRY 4.0 CONNECTIONS	Ethernet port - **WiFi in option**

PRODUCT CODES & OPTIONS

			OPTIONS					
PRODUCT CODE	COOLED	GAS LINE	SECOND GAS LINE	WIRE FEED	WIFI	NET WEIGHT		PICTURE
SAXX-200	AIR	•				21 kg	*46.3 lbs*	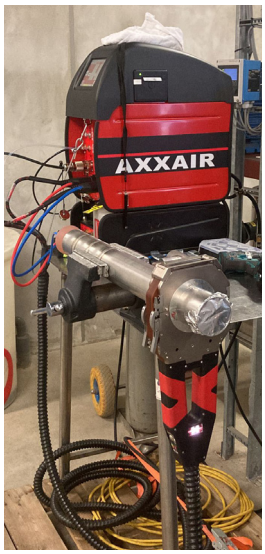
SAXX-200I	AIR	•			•	21 kg	*46.3 lbs*	
SAXX-200W	AIR	•		•		21 kg	*46.3 lbs*	
SAXX-200DG	AIR	•	•			21 kg	*46.3 lbs*	
SAXX-200IW	AIR	•		•	•	21 kg	*46.3 lbs*	
SAXX-200DGI	AIR	•	•		•	21 kg	*46.3 lbs*	
SAXX-200DGW	AIR	•	•	•		21 kg	*46.3 lbs*	
SAXX-200DGIW	AIR	•	•	•	•	21 kg	*46.3 lbs*	
SCOOL-700	Water cooler unit (700W)	Essential to the use of all water cooled machines. Compatible with all SAXX models listed above.				8 kg	*17.6 lbs*	

CAUTION: The power source is delivered without coolant.
See SAXX power source Accessories & consumables to order the 3 liter can (SACW-C006).

DIMENSIONS

PRODUCT CODE	A		B		C	
All SAXX-200 models	468 mm	*18.4"*	249 mm	*9.7"*	*482 mm*	*19"*
SCOOL-700	468 mm	*18.4"*	249 mm	*9.7"*	*146 mm*	*5.7"*

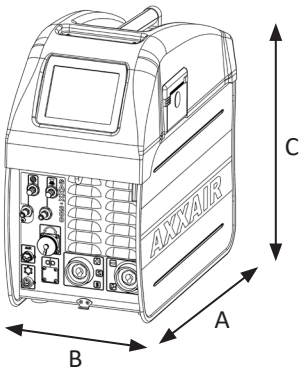

SAXX-200

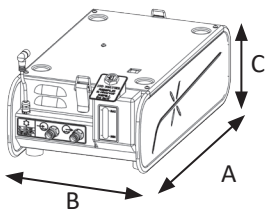

SCOOL-700

ACCESSORIES

CART ON WHEELS

With gas cylinder attachement

PART NO. SACG-X200

GAS SPLITTER PIPE

Allowing to connect 1 cylinder for torch and backgas monitoring

PART NO. SAFS-G01

HIGH PURITY GAS PIPE

Standard or splitter pipe

PART NO. SAFS-0700HP / SAFS-G01HP

SWITCHBOX

To use 2 weld heads with one power source

PART NO. SASW-DGW

WIRE FEEDER

PART NO. SADF2X

TIG MANUAL TORCH

PART NO. SATDMX-A/SATMX-E

ADAPTER KITS

To connect former generation of AXXAIR weld heads and competitors' weld heads

See Accessories & consumables for SAXX

CONSUMABLES

COOLING LIQUID

PART NO. SACW-CO06

PRINTER ROLLS

PART NO. SIMP-02

USB STICK

PART NO. SUSBX300

ORBITAL WELDING SOLUTIONS

POWER SOURCE SAXX 210

SCAN QR CODE
TO WATCH VIDEO

AXXAIR
AN SPG GROUP BRAND

www.AXXAIR.com

POWER SOURCE: SAXX-210

MAIN FEATURES

Orbital TIG welding power source 210 A, designed to be user friendly and intuitive to generate programs easily, with full data acquisition including measured control of shield and purge gas.

INTUITIVE PROGRAMMING

- Automatic parameters calculation and programming assistance
- 5.7" color touch screen and remote pendant with 4m long cable
- Multilingual menu

WATER COOLING UNIT

- Cooling capacity 1.4kW
- Minimum flow and temperature alarms

INTEGRATED PRINTER

Printing programs and actual parameters

DATA ACQUISITION ON USB KEY

- Record 200 welding programs
- The system monitors and saves welding parameters each second
- Data can be viewed on the supplied 'WeldReport' software, which can be converted to WPS format
- Update of the software via USB key

2 INDEPENDENT GAS LINES WITH FLOW MANAGEMENT
Welding torch, and internal gas flow control

WIRE FEEDER CONNECTOR

OPTIONS
REMOTE CONTROL BY WIFI
AVC/OSC AXIS

REMOTE CONTROL AND DATA MONITORING
via Ethernet cable or via WiFi (option)
with an App "Proface Remote HMI" to download on smartphone/tablet

Water cooled

COMPATIBLE WITH ALL AXXAIR WELDING MACHINES and most welding machines on the market (AMI, Polysoude, ESAB, Orbitec, Orbitalum, and MK product) thanks to adapter kits *(see accessories).*

TECHNICAL FEATURES

DESCRIPTION	Orbital TIG welding power source, 210A, autoline
WELDING CURRENT TYPE	DC
SUPPLY VOLTAGE	Single phase main with ground, 110 to 230 V+/- 15%, 50/60Hz
DUTY CYCLE	210A / 50% at 230V | 127A / 60% at 110 V 160A / 100% at 230V | 110A / 100% at 110V
IP STANDARD	IP21
DATA ACQUISITION	USB key
ALARMS	Arc voltage sensors, gas flow sensors, cooling liquid sensors, inverter operation alarm, motorizations alarm (machine and wire feeder)
SCREEN SIZE	5"
LANGUAGES	French, English, German, Spanish, Italian, Russian, Chinese, Korean, Japanese, Turkish, Dutch, Polish, Portuguese
INDUSTRY 4.0 CONNECTIONS	Ethernet port - **WiFi in option**

PRODUCT CODES & OPTIONS

					OPTIONS			
PRODUCT CODE	COOLED	GAS LINE	SECOND GAS LINE	WIRE FEED	WIFI	AVC / OSC AXIS	NET WEIGHT	
SAXX-210	WATER	•	•	•			44 kg	*97 lbs*
SAXX-210I	WATER	•	•	•	•		44 kg	*97 lbs*
SAXX-210OSC	WATER	•	•	•		•	*44 kg*	*97 lbs*
SAXX-210OSC	WATER	•	•	•	•	•	*44 kg*	*97 lbs*

CAUTION: The power source is delivered without coolant.
See SAXX power source Accessories & consumables to order the 3 liter can (SACW-C006).

DIMENSIONS

PRODUCT CODE	A		B		C	
SAXX-210	562 mm	*22.1"*	620 mm	*24.4"*	545 mm	*21.4"*
SAXX-210I						
SAXX-210OSC						
SAXX-210OSC						

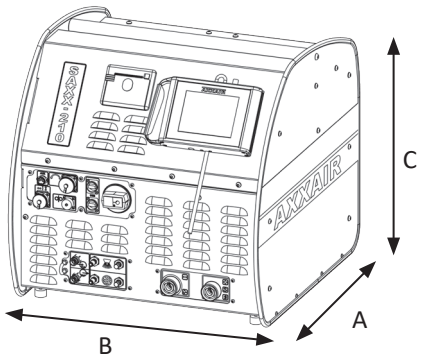

ACCESSORIES

CART ON WHEELS

With gas cylinder attachement

PART NO. SAGC-300

GAS SPLITTER PIPE

Allowing to connect 1 cylinder for torch and backgas monitoring

PART NO. SAFS-G01

HIGH PURITY GAS PIPE

Standard or splitter pipe

PART NO. SAFS-0700HP / SAFS-G01HP

SWITCHBOX

To use 2 weld heads with one power source

PART NO. SASW-DGW

WIRE FEEDER

PART NO. SADF2X

TIG MANUAL TORCH

PART NO. SATDMX-A/SATMX-E

ADAPTER KITS

To connect former generation of AXXAIR weld heads and competitors' weld heads

See Accessories & consumables for SAXX

CONSUMABLES

COOLING LIQUID

PART NO. SACW-CO06

PRINTER ROLLS

PART NO. SIMP-02

USB STICK

PART NO. SUSBX300

ORBITAL WELDING SOLUTIONS

POWER SOURCE SAXX 300

SCAN QR CODE
TO WATCH VIDEO

AXXAIR
AN SPG GROUP BRAND

www.AXXAIR.com

POWER SOURCE: SAXX-300

MAIN FEATURES

Orbital TIG welding power source 300 A, designed to be user friendly and intuitive to generate programs easily, with full data acquisition including measured control of shield and purge gas.

WATER COOLING UNIT
- Cooling capacity 1.4kW
- Minimum flow and temperature alarms

INTUITIVE PROGRAMMING
- Automatic parameters calculation and programming assistance
- 5.7" color touch screen and remote pendant with 4m long cable
- Multilingual menu

INTEGRATED PRINTER
Printing programs and actual parameters

2 INDEPENDENT GAS LINES WITH FLOW MANAGEMENT
Welding torch, and internal gas flow control

WIRE FEEDER CONNECTOR

DATA ACQUISITION ON USB KEY
- Record 200 welding programs
- The system monitors and saves welding parameters each second
- Sending and retrieving data through remote access to the SAXX's USB key
- Data can be viewed on the supplied 'WeldReport' software, which can be converted to WPS format
- Update of the software via USB key

OPTIONS
REMOTE CONTROL BY WIFI
AVC/OSC AXIS

REMOTE CONTROL AND DATA MONITORING
via Ethernet cable or via WiFi (option) with an App "Proface Remote HMI" to download on smartphone/tablet

Water cooled

COMPATIBLE WITH ALL AXXAIR WELDING MACHINES and most welding machines on the market (AMI, Polysoude, ESAB, Orbitec, Orbitalum, and MK product) thanks to adapter kits *(see accessories).*

TECHNICAL FEATURES

DESCRIPTION	Orbital TIG welding power source, 300A, autoline
WELDING CURRENT TYPE	DC
SUPPLY VOLTAGE	Three phase main with ground, 400 V +/- 15%, 50/60Hz
DUTY CYCLE	300A / 30%, 240A / 60%, 210A / 100% at 400V
IP STANDARD	IP21
DATA ACQUISITION	USB key
ALARMS	Arc voltage sensors, gas flow sensors, cooling liquid sensors, inverter operation alarm, motorizations alarm (machine and wire feeder)
SCREEN SIZE	5"
LANGUAGES	French, English, German, Spanish, Italian, Russian, Chinese, Korean, Japanese, Turkish, Dutch, Polish, Portuguese
INDUSTRY 4.0 CONNECTIONS	Ethernet port - **WiFi in option**

PRODUCT CODES & OPTIONS

					OPTIONS			
PRODUCT CODE	COOLED	GAS LINE	SECOND GAS LINE	WIRE FEED	WIFI	AVC / OSC AXIS	NET WEIGHT	
SAXX-300	WATER	•	•	•			44 kg	*97 lbs*
SAXX-300I	WATER	•	•	•	•		44 kg	*97 lbs*
SAXX-300OSC	WATER	•	•	•		•	*44 kg*	*97 lbs*
SAXX-300OSC	WATER	•	•	•	•	•	*44 kg*	*97 lbs*

CAUTION: The power source is delivered without coolant.
See SAXX power source Accessories & consumables to order the 3 liter can (SACW-C006).

DIMENSIONS

PRODUCT CODE	A		B		C	
SAXX-300	562 mm	*22.1"*	620 mm	*24.4"*	545 mm	*21.4"*
SAXX-300I						
SAXX-300OSC						
SAXX-300OSC						

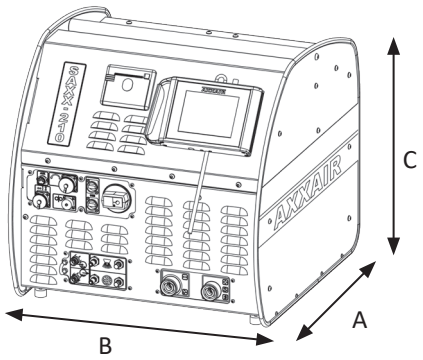

ACCESSORIES

CART ON WHEELS

With gas cylinder attachement

PART NO. SAGC-300

GAS SPLITTER PIPE

Allowing to connect 1 cylinder for torch and backgas monitoring

PART NO. SAFS-G01

HIGH PURITY GAS PIPE

Standard or splitter pipe

PART NO. SAFS-0700HP / SAFS-G01HP

SWITCHBOX

To use 2 weld heads with one power source

PART NO. SASW-DGW

WIRE FEEDER

PART NO. SADF2X

TIG MANUAL TORCH

PART NO. SATDMX-A/SATMX-E

ADAPTER KITS

To connect former generation of AXXAIR weld heads and competitors' weld heads

See Accessories & consumables for SAXX

CONSUMABLES

COOLING LIQUID

PART NO. SACW-CO06

PRINTER ROLLS

PART NO. SIMP-02

USB STICK

PART NO. SUSBX300

ORBITAL WELDING
SAXX POWER SOURCES

Accessories & consumables

AXXAIR
AN SPG GROUP BRAND

www.AXXAIR.com

REMOTE PENDANT (ONLY FOR SAXX-201)

Wired remote pendant for the SAXX-201 power source with 10 meters cable with remote access to all features.

PART NO.	DESCRIPTION	WEIGHT		DIMENSIONS		PICTURE
SREM-1	Remote pendant	1.9 kg	4.2 lbs	22 x 17 x 6 cm	8.7 x 6.7 x 2.4"	

CART ON WHEELS

Cart for transporting the SAXX-200/-201 power source and gas cylinders up to 10.5 m3.

PART NO.	DESCRIPTION	WEIGHT		DIMENSIONS		PICTURE
SACG-X200	Cart for SAXX200/201	22 kg	48 lbs	117 x 51 x 57 cm	46 x 20 x 22"	

Cart for transporting the SAXX-210/-300 power source and gas cylinders up to 10.5 m3.

PART NO.	DESCRIPTION	WEIGHT		DIMENSIONS		PICTURE
SAGC-300	Cart for SAXX210/300	55 kg	121 lbs	83 x 56 x 118 cm	33 x 22 x 46"	

GAS SPLITTER PIPE

For connecting the back and front purge gas to the same cylinder. To be used in combination with a pressure regulator for an industrial gas cylinder.

PART NO.	DESCRIPTION	WEIGHT		DIMENSIONS		PICTURE
SAFS-G01	Gas splitter pipe	0.2 kg	0.44 lbs	22 x 22 x 22 cm	8.7 x 8.7 x 8.7"	

HIGH PURITY GAS PIPE

These high-purity gas pipes offer a very smooth interior and exterior surface to prevent impurity buildup and ensure easy cleaning. It is resistant to porosity, chemical corrosion, and high temperatures, making it ideal for demanding applications.

PART NO.	DESCRIPTION	WEIGHT		DIMENSIONS		PICTURE
SAFS-0700HP	High purity gas pipe	0.4 kg	0.88 lbs	300 cm	118.11"	
SAFS-G01HP	High purity gas splitter pipe	0.2 kg	0.44 lbs	22 x 22 x 22 cm	8.7 x 8.7 x 8.7"	

TIG MANUAL TORCH

TIG manual torch allows manual tacking and welding with the SAXX power sources.

Water cooled Air cooled

PART NO.	DESCRIPTION	WEIGHT		DIMENSIONS		PICTURE
SATDMX-A	TIG manual torch - air cooled	2.1 kg	4.6 lbs	22 x 22 x 22 cm	8.7 x 8.7 x 8.7"	
SATMX-E	TIG manual torch - water cooled	2.1 kg	4.6 lbs	22 x 22 x 22 cm	8.7 x 8.7 x 8.7"	

WIRE FEEDER (FOR SAXX)

- Cable length 5 m max / 16 ft
- Supplied with SAXX power source-connection cable and teflon sheath to guide the wire
- Drive pressure adjusted by adjustable spring, with handle.

PART NO.	DESCRIPTION	WEIGHT		DIMENSIONS	
SADF2X	External wire feeder for SAXX	12 kg	26 lbs	59.7 x 38.4 x 24 cm	23.5 x 15.1 x 9.4"

SWITCHBOX

The AXXAIR switchbox is the ideal solution when having to perform repetitive welds and wanting to optimize the welding cycle time to be more efficient and increase productivity.

The AXXAIR switchbox allows using alternatively two welding machines with a single SAXX series orbital welding power source and to alternate between these two machines. The parts to be welded can be positioned in one of the two machines while the other is performing a weld. This optimizes the preparation and setup time of the parts.

Possible use of:

- all SAXX compatible power sources* and put 2 different machines with 2 different programs
- manual torches
- two wire feeding devices **
- two gas lines per machine **
  (possibility of setting different gas flow rates for each line)

Advantages: significant time saving, avoiding the simultaneous purchase of two welding power supplies, cost reduction, intuitive and efficient use thanks to the SAXX interface

PART NO.	SASW-DGW
DESCRIPTION	Switchbox
SUPPLY VOLTAGE	110 to 230 V, 50 / 60Hz, 1.9A max
MAX WELDING CURRENT	300 A
OPERATING TEMPERATURE	+0°C / + 40 °C (32°F/104°F)
LENGHT OF CABLES	1.5m between the switchbox and SAXX power source
COMPATIBLE WITH	**SATFX, SATO, SX, SATP, SAMX** AMI (models 8,9 and 95), Polysoude (UHP, MW, MU IV), Orbitalum (Orbiweld and orbiweld S), ESAB (PRB), Orbitec (OSW)
DIMENSIONS	467 x 247 x 385 mm / 18.4 x 9.7 x 15.1"
WEIGHT	13 kg / 29 lbs

DIMENSIONS

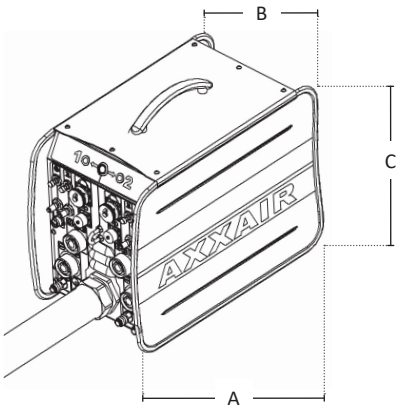

* except machines with AVC/OSC system
** depending on options selected on the SAXX

ADAPTER KITS

The SAXX power source can be paired with orbital welding heads from various different welding brands by using the required adaptor kit. Please refer to the adapter kits below.

PART NO.	DESCRIPTION	WEIGHT		DIMENSIONS		PICTURE
SAFS-ADAMI1	Adapter kit for AMI models 8 and 9, initially connected to the AMI power supplies 205, 207, 217	1.2 kg	2.64 lbs	L: < 40 cm	L: < 15.7"	AMI
SAFS-ADAMI2	Adapter kit for AMI models 8 and 9, initially connected to the AMI power supplies 307	1.3 kg	2.86 lbs	L: < 40 cm	L: < 15.7"	AMI
SAFS-ADAMI3	Adapter kit for AMI models 8 and 9, initially connected to the AMI power supplies 227, 327, 415	1.3 kg	2.86 lbs	L: < 40 cm	L: < 15.7"	AMI
SAFS-ADAMI4	Motor adapter cable for connecting AXXAIR X-500MIA / X-500MIE / X-750MIE to the AMI 307 generator	0.4 kg	0.88 lbs	L: 25 cm	L: 0.84"	AMI
SAFS-ADAMI5	Adapter kit for **AMI models 8 and 9**, initially connected to the AMI power supplies 227	1.3 kg	2.86 lbs	L: < 40 cm	L: < 15.7"	AMI
SAFS-ADORBI1	Adapter kit for Orbitalum models: Orbiweld38S, Orbiweld76S, Orbiweld115S, Orbiweld170S, Orbiweld12, Orbiweld19, Orbiweld65, Orbiweld115, Orbiweld170 and for MK Products models: MiniMicro, 5001, 5002, 5003, DiamondBack	1.2 kg	2.64 lbs	L: < 50 cm	L: < 19.7"	ORBITALUM
SAFS-ADPOLY1	Adapter kit for MW Polysoude models: UHP250, UHP500, UHP1500, MW40, MW65, MW115, MW170, MU IV 38, MU IV 80, MU IV 104, MU IV 115, MU IV 128, TS34, TS73, TS2000	0.9 kg	1.98 lbs	L: < 50 cm	L: < 19.7"	POLYSOUDE 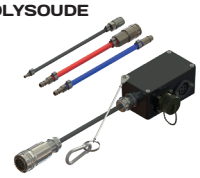
SAFS-ADORBITEC	Adapter kit for Orbitec models: OSW40, OSW80, OSW115, OSW170, OSK21C, OSK38C, OSK76S, OSK115S	0.3 kg	0.66 lbs	L: < 50 cm	L: < 19.7"	ORBITEC
SAFS-ADESAB	Adapter kit for ESAB models: PRB17-49, PRB33-90, PRB60-170	0.5 kg	1.10 lbs	L: < 50 cm	L: < 19.7"	ESAB

COOLING LIQUID

Cooling liquid with low electrical conductivity (3 litre container). The cooling liquid is not directly delivered with the power source.

PART NO.	DESCRIPTION	WEIGHT		DIMENSIONS		PICTURE
SACW-CO06	Cooling liquid 3 litres	3.3 kg	7.3 lbs	15 x 15 x 27 cm	6 x 6 x 11"	

PRINTER ROLLS

Rolls for integrated printer (set of 10).

PART NO.	DESCRIPTION	WEIGHT		DIMENSIONS		PICTURE
SIMP-02	Printer rolls	0.7 kg	1.5 lbs	29 x 9.5 x 5 cm	11 x 4 x 2"	

USB KEY

USB key with software for recording welding programs and the WeldReport.

PART NO.	DESCRIPTION	WEIGHT		DIMENSIONS		PICTURE
SUSBX200	USB key for SAXX-200	0.2 kg	0.44 lbs	6 x 2 x 1 cm	2.4 x 0.79 x 0.39"	
SUSBX210	USB key for SAXX-210	0.2 kg	0.44 lbs	6 x 2 x 1 cm	2.4 x 0.79 x 0.39"	
SUSBX300	USB key for SAXX-300	0.2 kg	0.44 lbs	6 x 2 x 1 cm	2.4 x 0.79 x 0.39"	

AXXAIR
SAXX-201
NO WATER
REMPLIR
REFILL

MULTI BRAND COMPATIBLE ORBITAL WELDING SOLUTIONS

CLOSED WELD HEADS

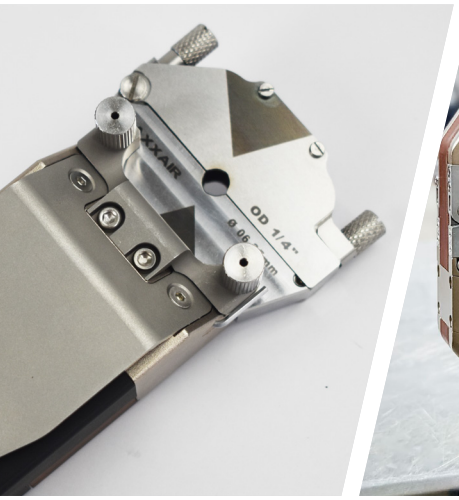

AXXAIR
AN SPG GROUP BRAND

www.AXXAIR.com

MULTI BRAND COMPATIBLE AXXAIR CLOSED WELD HEADS

Designed for ultimate versatility, AXXAIR's multi brand compatible closed weld heads integrate with multiple orbital welding power sources, including selected Magnatech, AMI and AXXAIR models. This cross-functionality allows users to enhance or expand their existing equipment without system replacement, ensuring consistent performance across diverse setups.

X-500MIA X-500MIE	X-750MIE	AMX-52	AMX-115	AMX-170
TUBE O/D RANGE: 0.118 - 0.5" / 3 - 12.7 mm	TUBE O/D RANGE: 0.118 - 0.75" / 3 - 19.05 mm	TUBE O/D RANGE: 0.25 - 2" / 6 - 52 mm	TUBE O/D RANGE: 0.5 - 4.5" / 12 - 115 mm	TUBE O/D RANGE: 1.5 - 6.625" / 38 - 170 mm

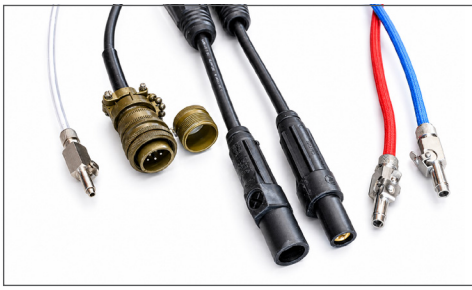

All machines are designed for compatibility with AMI power sources through dedicated connection systems and, where required, adapter kits.

POWER SOURCE COMPATIBILITY

MULTI BRAND COMPATIBLE CLOSED HEADS	BRAND	POWER SOURCE	Directly compatible	With adapter kit
X-500MIA X-500MIE X-750MIE AMX-52 AMX-115 AMX-170*	AMI	**AMI-205** with auto-calibration	YES	NO
		AMI-207 with auto-calibration	YES	NO
		AMI-217 with auto-calibration	YES	NO
		AMI-307	NO	YES : SAFS-ADAMI4
	MAGNATECH	TUBEMASTER 514	NO	YES: 1006365*
	AXXAIR INNOVATIVE ORBITAL SOLUTIONS	AXXAIR SAXX-201	NO	YES: SAFS-ADAMI1
		AXXAIR SAXX-200	NO	YES: SAFS-ADAMI1
		AXXAIR SAXX-210	NO	YES: SAFS-ADAMI1
		AXXAIR SAXX-300	NO	YES: SAFS-ADAMI1

The machines are not compatible with AMI 227, 327, 415, and MAGNATECH Pipemaster 515/516.
** the AMX-170 is not compatible with MAGNATECH Tubemaster 514.*

MULTI BRAND COMPATIBLE ORBITAL WELDING SOLUTIONS
MICROFIT CLOSED WELD HEAD X-500

0.118 - 0.5" o/d / 3 - 12.7 mm o/d

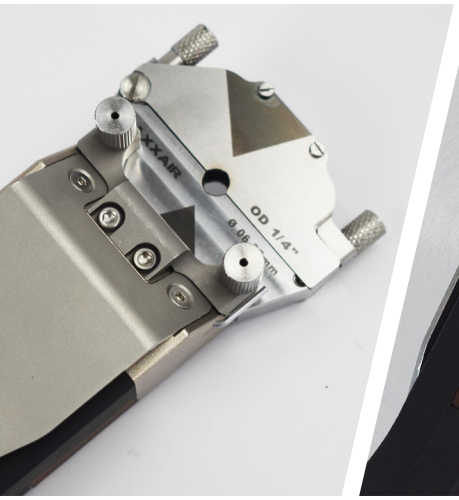

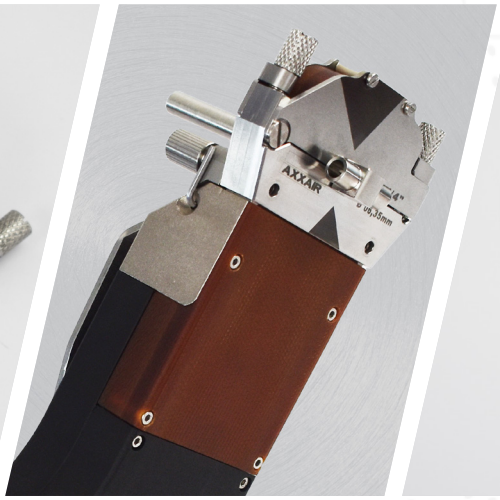

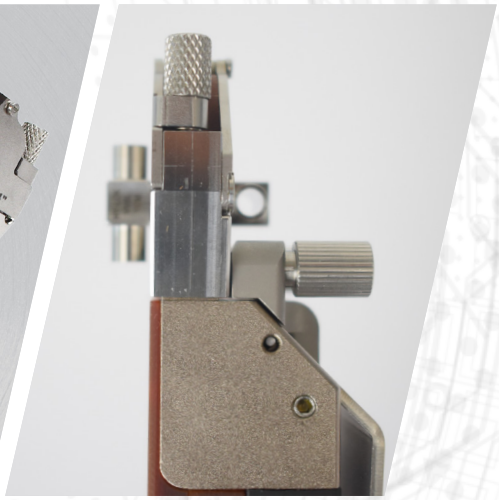

AXXAIR
AN SPG GROUP BRAND

www.AXXAIR.com

MULTI BRAND COMPATIBLE ORBITAL WELDING SOLUTIONS
MICROFIT CLOSED WELD HEAD X-500

0.118 - 0.5" o/d / 3 - 12.7 mm o/d

Combine with Pipe Purge Masters (PPM) solutions

- **Functions:** Orbital TIG welding
- **Materials:** Any kind of stainless steel and exotic alloys
- **Power options:** AMI power supplies with automatic calibration, MAGNATECH tubemaster 514 power supply, AXXAIR power supplies

X-500 with cassette

The extremely thin design of the X-500 weld head, the thinnest of all AXXAIR closed heads, is ideal for welding micro-fittings and tubes in tight spaces while ensuring precision and reliability in every weld, ideal for the semiconductor, aerospace and pharmaceutical industry.

The X-500 covers the size range of 0.118 - 0.5" / 3 - 12.7 mm o/d using diameter specific clamping cassettes. Air-cooled and water-cooled versions are available.

Designed for ultimate versatility, AXXAIR's multi brand compatible microfit closed weld heads integrate with selected Magnatech and AMI power supplies. This cross-functionality allows users to enhance or expand their existing equipment without system replacement, ensuring consistent performance across diverse setups.

MAIN FEATURES

- **High level of performance:** up to 20 welds per hour for the air-cooled version and up to 30 welds per hour for the water-cooled version
- **Greaseless operation:** compatible with international cleanroom application and operational standards
- **Optimized gas diffusion:** welds with very limited coloration
- **Easy maintenance and cleaning of the rotor:** with an integrated tool in the machine body
- **Compact and light:** 12.3 lbs / 5.6 kg with 8 meters cable (26 ft)

Water cooled

Air cooled

QUICK SET UP OF THE CASSETTE*

Thanks to the quick-fit cassette mounting system delivered with the machine

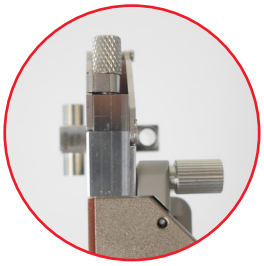

NARROW DESIGN

To weld microfittings or tubes with a straigth lenght as short as 6.35 mm / 0.25"

HOOK

Allows to hang the machine on different supports

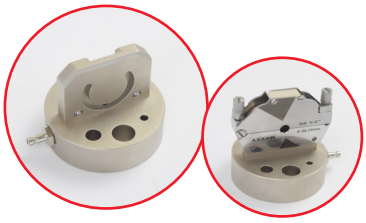

SINGLE INTEGRATED TOOL

For disassembling the machine to clean the rotor, adjust/change the electrode

CASSETTE HOLDER (INCLUDED WITH THE MACHINE)

Allows the cassette to be cooled and to center the first piece for the next weld

Cassettes are not included: to be ordered separately according to the tube diameter

** X-500 is compatible with AMI and MAGNATECH clamping cassettes, please contact us.*

POWER SOURCE COMPATIBILITY

BRAND	POWER SOURCE	Directly compatible	with adaptor
AMI	AMI-205 with auto-calibration	YES	NO
	AMI-207 with auto-calibration	YES	NO
	AMI-217 with auto-calibration	YES	NO
	AMI-307	NO	YES : SAFS-ADAMI4
MAGNATECH	TUBEMASTER 514	NO	YES: 1006365
AXXAIR INNOVATIVE ORBITAL SOLUTIONS	AXXAIR SAXX-201	NO	YES: SAFS-ADAMI1
	AXXAIR SAXX-200	NO	YES: SAFS-ADAMI1
	AXXAIR SAXX-210	NO	YES: SAFS-ADAMI1
	AXXAIR SAXX-300	NO	YES: SAFS-ADAMI1

All machines are designed for compatibility with AMI power sources through dedicated connection systems and, where required, adapter kits.

The machines are not compatible with AMI 227, 327, 415, and MAGNATECH Pipemaster 515/516.

DIMENSIONS (MM/INCH)

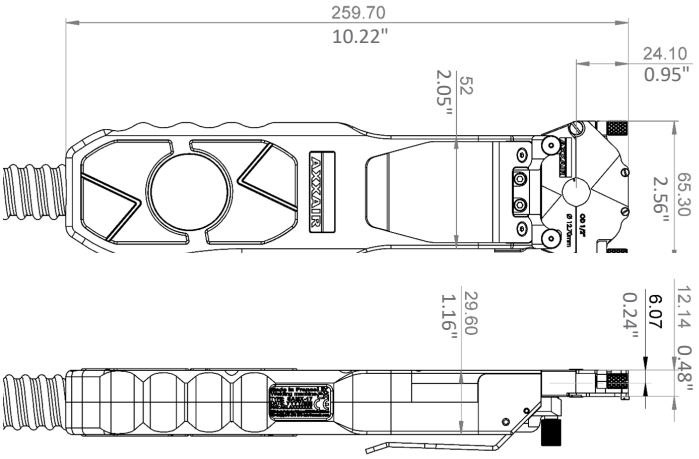

DELIVERY AND STORAGE

Delivered in a shockproof case
with a hook lead

TECHNICAL FEATURES

PART NO.	X-500MIA	X-500MIE
DESCRIPTION	Microfit closed weld headwith 8 m (26 ft) cable **Air cooled** **Compatible with AMI power source**	Microfit closed weld head with 8 m (26 ft) cable **Water cooled** **Compatible with AMI power source**
TUBE DIAMETER (O/D)	3 - 12.7 mm	3 - 12.7 mm
	0.118 - 0.5"	0.118 - 0.5"
ELECTRODE DIAMETER	1.0 mm	1.0 mm
	0.040"	0.040"
WEIGHT WITH CABLE	12.3 lbs / 5.6 kg	12.3 lbs / 5.6 kg
MAXIMUM NUMBER OF WELDS PER HOUR on a 12.7 mm diameter, 1.24 mm thick stainless steel tube	20	30
MAX WELDING CURRENT	80 A	80 A
OPERATING TEMPERATURE	+0°C / + 40 °C (32°F / 104°F)	+0°C / + 40 °C (32°F / 104°F)

ACCESSORIES

CLAMPING CASSETTES

PART NO. X-500-CAXX.XX*

TABLE MOUNT

PART NO. SATFX-PSUP

LEAD EXTENSION

5 or 10 meters

For AXXAIR SAXX power supplies only, to be used with the adapter SAFS-ADAMI1

PART NO. SAFS-05MX / SAFS-10MX
PART NO. SAFS-05MAX / SAFS-10MAX

CONSUMABLES

ELECTRODES

Diameter 1.0 mm / 0.039"

PART NO. SCE10-XX.X*

ADAPTER KITS

ADAPTER FOR AMI 307

PART NO. SAFS-ADAMI4

ADAPTER FOR AXXAIR SAXX

PART NO. SAFS-ADAMI1

ADAPTER FOR MAGNATECH TUBEMASTER 514

PART NO. 1006365

See all details of the X-500 microfit closed head accessories and consumables in the AXXAIR brochure.

PPM PIPE PURGE MASTERS

Other accessories are available on request depending on the configuration of the tubes to be welded.
Discover also all Pipe Purge Masters (PPM) accessories for purging solutions!
www.PURGEMASTERS.com

* XX.XX = DIAMETER

MULTI BRAND COMPATIBLE ORBITAL WELDING SOLUTIONS
MICROFIT CLOSED WELD HEAD X-750

0.118 - 0.75" o/d / 3 - 19.05 mm o/d

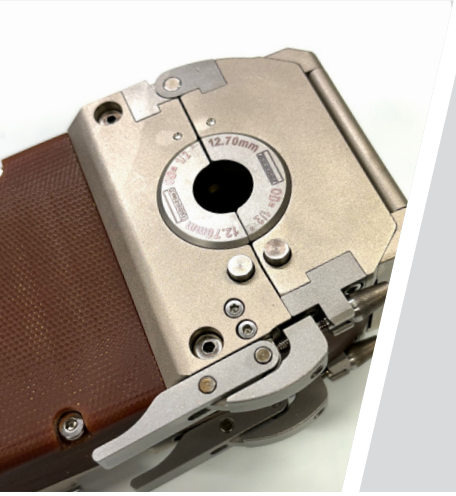

AXXAIR
AN SPG GROUP BRAND

www.AXXAIR.com

MULTI BRAND COMPATIBLE ORBITAL WELDING SOLUTIONS
MICROFIT CLOSED WELD HEAD X-750

0.118 - 0.75" o/d / 3 - 19.05 mm o/d

Combine with Pipe Purge Masters (PPM) solutions

- **Functions:** Orbital TIG welding
- **Materials:** Any kind of stainless steel and exotic alloys
- **Power options:** AMI power supplies with automatic calibration, MAGNATECH tubemaster 514, AXXAIR power supplies

X-750 with collets

The microfit closed head X-750 is ideal for welding tubes and micro-fittings in tight spaces, such as in the semiconductor, aerospace, or pharmaceutical industry, while ensuring precision and reliability in every weld.

This weld head is water-cooled and is made for **high duty cycle orbital welding.** It covers the size range of 0.118 - 0.75" / 3 - 19.05 mm o/d using quick connect stainless steel collets without set screws.

Designed for ultimate versatility, AXXAIR's multi brand compatible microfit closed weld heads integrate with selected Magnatech, AMI and AXXAIR power supplies. This cross-functionality allows users to enhance or expand their existing equipment without system replacement, ensuring consistent performance across diverse setups.

MAIN FEATURES

- **High level of performance:** water-cooled machine
- **Greaseless operation:** compatible with international cleanroom application and operational standards
- **Optimized gas diffusion:** welds with very limited coloration
- **Easy maintenance and cleaning of the rotor:** with an integrated tool in the machine body
- **Compact and light:** 12.8 lbs / 5.8 kg with 8 meters cable (26 ft)

Water cooled

QUICK CONNECT STAINLESS STEEL COLLETS
machined to the diameter of the tube

HOOK
allows to hang the machine on different supports

SINGLE INTEGRATED TOOL
For disassembling the machine to clean the rotor, adjust/change the electrode

PIVOTING WINDOW
with shade 9 welding glass

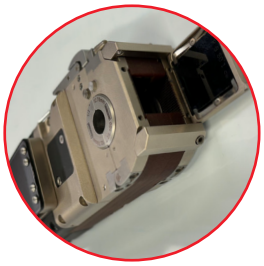

DJUSTABLE FORCE LAMPING SYSTEM
Allows precise adjustment of the rce of the collets on e tube to be welded and helps opening after welding.

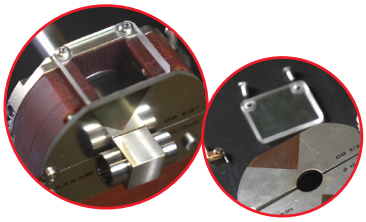

ACCESSORY: OFFSET ELECTRODE KIT
Made to weld tube-to-microfit

POWER SOURCE COMPATIBILITY

BRAND	POWER SOURCE	Directly compatible	with adaptor
AMI	AMI-205 with auto-calibration	YES	NO
	AMI-207 with auto-calibration	YES	NO
	AMI-217 with auto-calibration	YES	NO
	AMI-307	NO	YES : SAFS-ADAMI4
MAGNATECH	TUBEMASTER 514	NO	YES: 1006365
AXXAIR INNOVATIVE ORBITAL SOLUTIONS	AXXAIR SAXX-201	NO	YES: SAFS-ADAMI1
	AXXAIR SAXX-200	NO	YES: SAFS-ADAMI1
	AXXAIR SAXX-210	NO	YES: SAFS-ADAMI1
	AXXAIR SAXX-300	NO	YES: SAFS-ADAMI1

All machines are designed for compatibility with AMI power sources through dedicated connection systems and, where required, adapter kits.

The machines are not compatible with AMI 227, 327, 415, and MAGNATECH Pipemaster 515/516.

DIMENSIONS (MM/INCH)

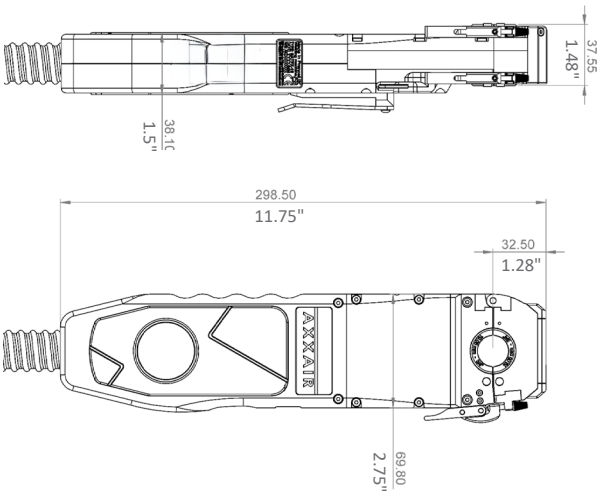

DELIVERY AND STORAGE

Delivered in a shockproof case
with a hook lead

TECHNICAL FEATURES

PART NO.	X-750MIE
DESCRIPTION	Microfit closed weld head with 8 m / 26 ft cable **Water cooled** **Compatible with AMI power source**
TUBE DIAMETER (O/D)	3 - 19.05 mm
	0.118 - 0.75"
ELECTRODE DIAMETER	1.0 mm or 1.6 mm
	0.040" or 1/16"
WEIGHT WITH CABLE	12.8 lbs / 5.8 kg
MAXIMUM WEDLING CURRENT	120 A
DUTY CYCLE	80 A at 60%
OPERATING TEMPERATURE	+0°C / + 40 °C (32°F / 104°F)

ACCESSORIES

CLAMPING COLLETS

PART NO. X-750-CXX*

OFFSET ELECTRODE KIT

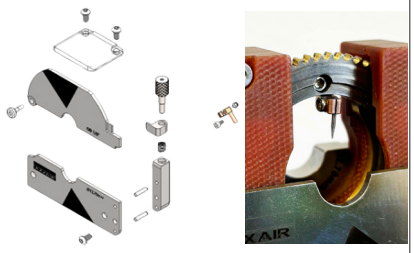

PART NO. X-750-TXX.XX*

TABLE MOUNT

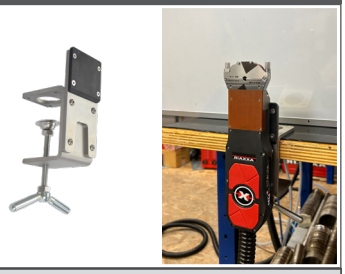

PART NO. SATFX-PSUP

CONSUMABLES

LEAD EXTENSION

5 or 10 meters

For AXXAIR SAXX power supplies only, to be used with the adapter SAFS-ADAMI1

PART NO. SAFS-05MX / SAFS-10MX

ELECTRODES

Diameter 1.0 mm / 0.039"
or 1.6 mm / 1/16"

PART NO. SCE10-XX* / SCE16-XX*

ADAPTER KITS

ADAPTOR FOR AMI 307

PART NO. SAFS-ADAMI4

ADAPTOR FOR AXXAIR SAXX

PART NO. SAFS-ADAMI1

ADAPTOR FOR MAGNATECH TUBEMASTER 514

PART NO. 1006365

See all details of the X-750 microfit closed head accessories and consumables in the AXXAIR brochure.

PPM PIPE PURGE MASTERS

Other accessories are available on request depending on the configuration of the tubes to be welded.
Discover also all Pipe Purge Masters (PPM) accessories for purging solutions!
www.PURGEMASTERS.com

* XX = DIAMETER

MULTI BRAND COMPATIBLE ORBITAL WELDING SOLUTIONS

CLOSED WELD HEADS: AMX-52 / AMX-115

0.25 - 4.5" o/d / 6 - 115 mm o/d

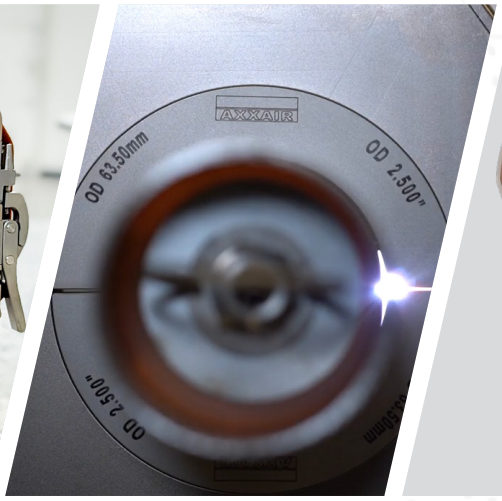

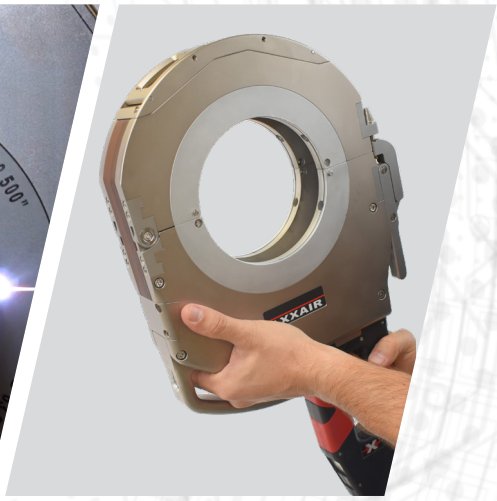

AXXAIR
AN SPX GROUP BRAND

www.AXXAIR.com

MULTI BRAND COMPATIBLE ORBITAL WELDING SOLUTIONS
CLOSED ORBITAL WELD HEADS AMX 52 / AMX 115

0.25 - 4.5" o/d / 6 - 115 mm o/d

Combine with Pipe Purge Masters (PPM) solutions

- **Function:** Orbital TIG welding
- **Materials:** Any kind of steel and exotic alloys
- **Power options:** AMI power supplies with automatic calibration, MAGNATECH tubemaster 514, AXXAIR power supplies

The AMX closed weld heads offer the ability to achieve high-quality and repeatable welds in confined spaces.

These closed heads are suitable for orbital welding through a simple fusion process without adding filler metal, making them ideal for thin tubes of various grades of stainless steel (less than 3 mm thick). Also, they are essential for welding nickel or titanium-based alloys sensitive to oxidation, ensuring installations with impeccable resistance to chemicals or heat.

The AMX heads offer the same precision and performance as the SATFX range, and are compatible with selected Magnatech, AMI and AXXAIR power sources. The AMX weld heads provide maximum flexibility for integration into existing orbital welding setups.

Commonly used in industries with high standards, such as aeronautics, semi-conductors, pharmaceuticals, and food processing, the narrow width of the head suits construction sites with limited straight sections, as well as workshops and clean rooms.

MAIN FEATURES

- **Optimized gas diffusion**
- **Grease free operation**: compatible with clean room standards
- **Easy cleaning and maintenance**
- Lead length: 8 m / 27 ft

AMX-52

AMX-115

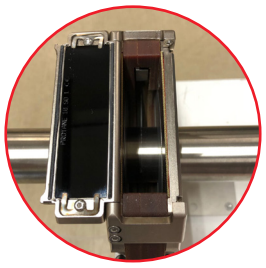

WIDE PIVOTING WINDOW
with shade 10 welding lens

STAINLESS STEEL JAWS WITH QUICK ASSEMBLY WITHOUT TOOLS
Standard and wide clamping jaws for increased rigidity when welding accessories

CASSETTES (ACCESSORY)
Cassettes for welding in confined areas. Easy positioning of the cassette on the parts to be welded before fixing the central body of the head

ADJUSTABLE FORCE CLAMPING SYSTEM
to ensure a consistent clamping of the machine

OPTIMIZED HANDLING
ergonomic design with soft touch compound areas

Water cooled

POWER SOURCE COMPATIBILITY

BRAND	POWER SOURCE	Directly compatible	with adaptor
AMI	AMI-205 with auto-calibration	YES	NO
	AMI-207 with auto-calibration	YES	NO
	AMI-217 with auto-calibration	YES	NO
	AMI-307	NO	YES : SAFS-ADAMI4
MAGNATECH	TUBEMASTER 514	NO	YES: 1006365
AXXAIR INNOVATIVE ORBITAL SOLUTIONS	AXXAIR SAXX-201	NO	YES: SAFS-ADAMI1
	AXXAIR SAXX-200	NO	YES: SAFS-ADAMI1
	AXXAIR SAXX-210	NO	YES: SAFS-ADAMI1
	AXXAIR SAXX-300	NO	YES: SAFS-ADAMI1

All machines are designed for compatibility with AMI power sources through dedicated connection systems and, where required, adapter kits.

The machines are not compatible with AMI 227, 327, 415, and MAGNATECH Pipemaster 515/516.

DIMENSIONS (MM/INCH)

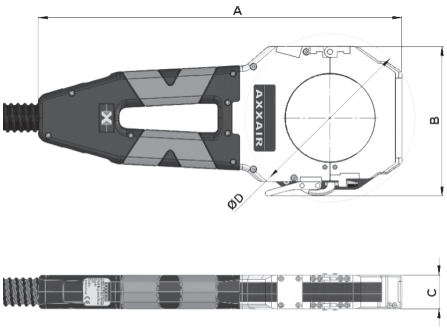

DIM	SATFX-52		SATFX-115	
A	375 mm	14.76"	439 mm	17.28"
B	142 mm	5.59"	206 mm	8.11"
C	37.6 mm	1.48"	37.6 mm	1.48"
D	160 mm	6.3"	242 mm	9.53"

DELIVERY AND STORAGE

Delivered in a shockproof case
with a hook lead

TECHNICAL FEATURES

PART NO	AMX-52	AMX-115
DESCRIPTION	Closed welding head with 8 m / 26 ft lead - **Water cooled** **Compatible with AMI power source**	Closed welding head with 8 m / 26 ft lead - **Water cooled** **Compatible with AMI power source**
TUBE DIAMETER (O/D)	6 - 52 mm	12 - 115 mm
	0.25 - 2"	0.5 - 4.5"
ELECTRODE DIAMETER	1.6 or 2.4 mm	1.6 or 2.4 mm
	1/16 or 3/32	1/16 or 3/32
WEIGHT WITH CABLE	18.96 lbs / 8.6 kg	20.72 lbs / 9.4 kg
DUTY CYCLE AT 100%	100 A	100 A
MAX WELDING CURRENT	150 A	150 A
OPERATING TEMPERATURE	+0°C / + 40 °C (32°F / 104°F)	+0°C / + 40 °C (32°F / 104°F)

ACCESSORIES

CLAMPING JAWS

Thin or wide

PART NO. SMNXXX-XX* / SMLXXX-XX*

ADAPTATION SPACERS

PART NO. SMNXXX-ETXXX*

ELBOW FLANGES

See Accessories & consumables for SATFX

CASSETTES

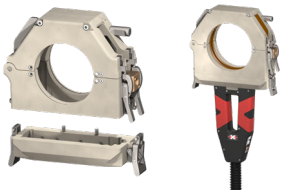

PART NO. SATFXXX-CA01*

TABLE MOUNTS

PART NO. SATFX-SUP

PURGING KITS

PART NO. SKIF-01 / SKIB-01

CONSUMABLES

ELECTRODE HOLDERS

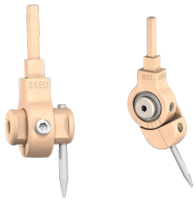

PART NO. SSEDX / SSEIX

LEAD EXTENSION

5 or 10 meters

For AXXAIR SAXX power supplies only, to be used with the adapter SAFS-ADAMI1

PART NO. SAFS-05MX / SAFS-10MX

ELECTRODES

Diameter 1.6 or 2.4 mm / 1/16 or 3/32"

PART NO. SCE16-XX / SCE24-XX

PPM PIPE PURGE MASTERS

Other accessories are available on request depending on the configuration of the tubes to be welded.
Discover also all Pipe Purge Masters (PPM) accessories for purging solutions!

www.PURGEMASTERS.com

ADAPTER KITS

ADAPTER FOR AMI 307

PART NO. SAFS-ADAMI4

ADAPTER FOR AXXAIR SAXX

PART NO. SAFS-ADAMI1

ADAPTER FOR MAGNATECH TUBEMASTER 514

PART NO. 1006365

* XX = DIAMETER
* XXX = MODEL SATFX52 / SATFX76 / SATFX115

MULTI BRAND COMPATIBLE ORBITAL WELDING SOLUTIONS

CLOSED WELD HEAD AMX-170

1.5 - 6.625" o/d / 38 - 170 mm o/d

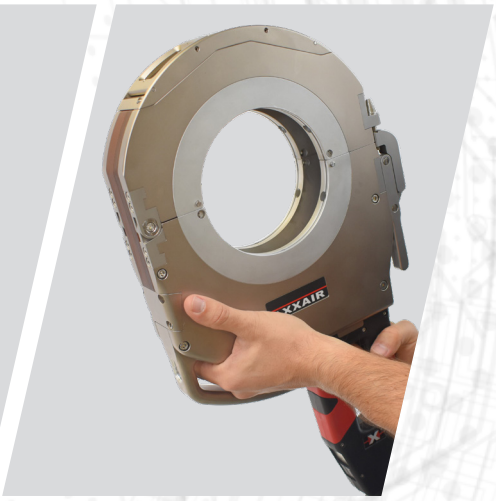

AXXAIR
AN SPG GROUP BRAND

www.AXXAIR.com

MULTI BRAND COMPATIBLE ORBITAL WELDING SOLUTIONS
CLOSED ORBITAL WELD HEAD AMX-170

1.5 - 6.625" o/d / 38 - 170 mm o/d

Combine with Pipe Purge Masters (PPM) solutions

- **Function:** Orbital TIG welding
- **Materials:** Any kind of steel and exotic alloys
- **Power options:** AMI power supplies with automatic calibration, AXXAIR power supplies

Closed orbital welding heads have become essential in various industries, such as pharmaceutical, chemical, food and beverage sectors. These industries demand high-precision and high-quality welding solutions, especially for large diameter tubes and thick walls.

AXXAIR's AMX-170 closed weld head is specifically designed to meet these growing demands, offering reliable and consistent performance. Compatible with selected AMI and AXXAIR power sources, the AMX-170 head provides exceptional versatility and easy integration into existing orbital welding systems. It enables the creation of precise, repeatable, and high-quality welds—crucial for ensuring the integrity and safety of piping systems used in these sensitive industries. As a result, its use is increasingly sought after, perfectly meeting the specific needs of the most demanding industrial applications.

MAIN FEATURES

- Operating **without grease**: compatible with clean room standards
- **Direct gas supply** with an optimized gas diffusion system. Max flow rate: 60l/min
- Easy maintenance and cleaning
- Lead length: 8 m / 27 ft

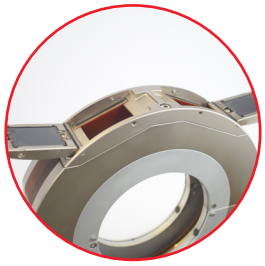

2 PIVOTING WINDOWS with shade 10 **welding glass**

INTEGRATED OFFSET ELECTRODE ADJUSTMENT

TWO ERGONOMIC HANDLES to facilitate the handling and positioning of the head

ADJUSTABLE CLAMPING PRESSURE SYSTEM to ensure a consistent clamping of the machine

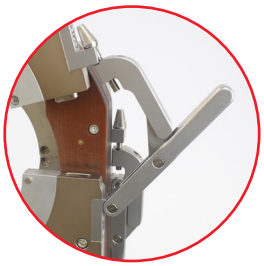

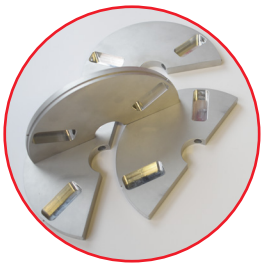

STANDARD ALUMINUM CLAMPING JAWS SCREW ON THE MACHINE

Water cooled

www.AXXAIR.com

POWER SOURCE COMPATIBILITY

BRAND	POWER SOURCE	Directly compatible	with adaptor
AMI	AMI-205 with auto-calibration	YES	NO
	AMI-207 with auto-calibration	YES	NO
	AMI-217 with auto-calibration	YES	NO
	AMI-307	NO	YES : SAFS-ADAMI4
AXXAIR INNOVATIVE ORBITAL SOLUTIONS	AXXAIR SAXX-201	NO	YES: SAFS-ADAMI1
	AXXAIR SAXX-200	NO	YES: SAFS-ADAMI1
	AXXAIR SAXX-210	NO	YES: SAFS-ADAMI1
	AXXAIR SAXX-300	NO	YES: SAFS-ADAMI1

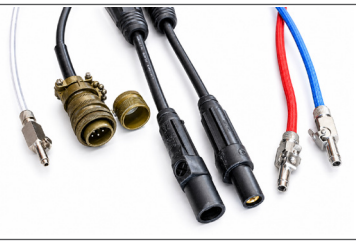

All machines are designed for compatibility with AMI power sources through dedicated connection systems and, where required, adapter kits.

The AMX-170 is not compatible with AMI 227, 327, 415, and MAGNATECH Pipemaster 515/516 and Tubemaster 514.

TECHNICAL FEATURES

PART NO.	AMX-170
DESCRIPTION	Closed welding head with 8m / 26ft cable **Water cooled** **Compatible with AMI power source**
TUBE DIAMETER	38 - 170 mm
	1.5" - 6.625"
ELECTRODE DIAMETER	1.6 or 2.4 mm
	1/16 or 3/32
WEIGHT WITH CABLE	14.5 kg
	31.97 lbs
DUTY CYCLE AT 100%	120 A
MAX WELDING CURRENT	150 A
OPERATING TEMPERATURE	+0°C / + 40 °C (32°F / 104°F)

DIMENSIONS (MM/INCH)

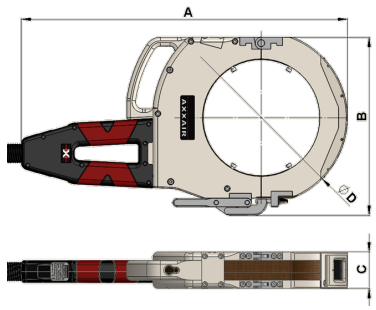

DIM	SATFX-170	
A	548 mm	21.57"
B	299 mm	11.77"
C	61.3 mm	2.41"
D	290 mm	11.41"

DELIVERY AND STORAGE

Delivered in a shockproof case
with a lead hook and a flap handling tool

ACCESSORIES

CLAMPING JAWS

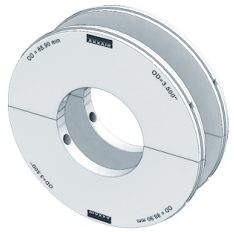

PART NO. SMN170-XX*

ADAPTATION SPACERS

PART NO. SMN170-ET115

ELBOW FLANGES

Available upon request

TABLE MOUNTS

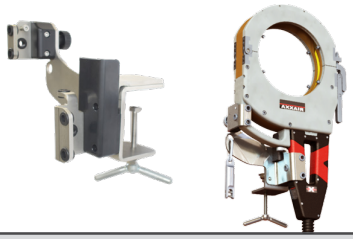

PART NO. SATFX-170-SUP

ELECTRODE HOLDERS

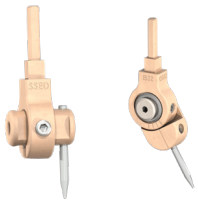

PART NO. SSEDX / SSEIX

LEAD EXTENSION

5 or 10 meters

For AXXAIR SAXX power supplies only, to be used with the adapter SAFS-ADAMI1

PART NO. SAFS-05MX / SAFS-10MX

CONSUMABLES

ELECTRODES

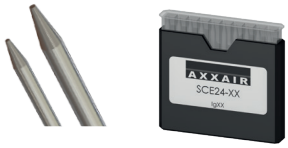

Diameter 1.6 or 2.4 mm / 1/16 or 3/32"

PART NO. SCE16-XX / SCE24-XX

PPM PIPE PURGE MASTERS

Other accessories are available on request depending on the configuration of the tubes to be welded.
Discover also all Pipe Purge Masters (PPM) accessories for purging solutions!

www.PURGEMASTERS.com

* XX = OUTSIDE DIAMETER

ADAPTER KITS

ADAPTER FOR AMI 307

PART NO. SAFS-ADAMI4

ADAPTER FOR AXXAIR SAXX

PART NO. SAFS-ADAMI1

SAXX-201
AXXAIR
AUX
S
sie mund
AXX

GLOBAL LEADER IN SPECIALIZED MACHINING, WELDING AND FABRICATION EQUIPMENT

SPECIALIZED FABRICATION EQUIPMENT GROUP

Contact Americas
sales@sfe-brands.com

Contact International
sales-int@sfe-brands.com

www.SFE-BRANDS.COM

Our group policy is one of continuous improvements and acquisitions. Products and data tables are subject to change and may vary from those illustrated. *Copyright © 2026 Specialized Fabrication Equipment Group, All rights reserved.*